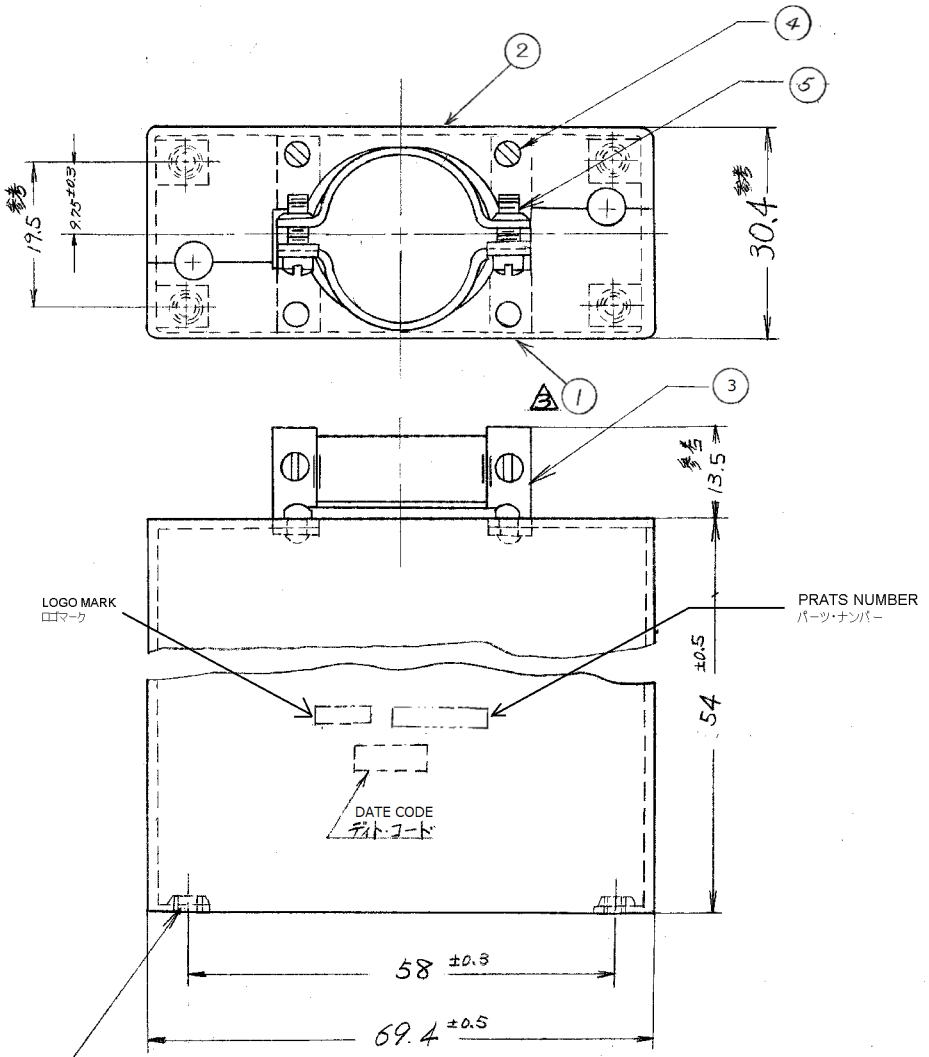

NOTE;

1. 最大電線束線径 ; φ26.
   最小電線束線径 ; φ17.
2. -1 絶縁スリーブなし
   -2 絶縁スリーブ(P/N 21330-4) 2ヶ添付
   7-1 絶縁スリーブなし

3. リベット(スチール、ニッケルメッキ)と固定側ケーブルクランプ(スチール、錫メッキ)を組込んだもの.

4. ウィスカー対策・RoSH対応品.

OBSOLETE		OBSOLETE				
	-1	-2	-1	番号 (NUMBER)	名称 (NAME)	摘要 (REMARKS)	ITEM NO.
	—	—	—		CABLE CLAMP 4	ZINC-COATED STEEL, PAINTED TO METALIC SILVER	3
	—	—	—		SHIELD (RIGHT HALF) 4	ZINC-COATED STEEL, PAINTED TO METALIC SILVER	2
	—	—	—		SHIELD (LEFT HALF) 4	ZINC-COATED STEEL, PAINTED TO METALIC SILVER	1
2	2	2			#4-40 UNC-2A LENGTH 19.1REF 4	STAINLESS STEEL, ORGANIC COATING	5
2	2	2			#4-40 UNC-2A LENGTH 6.4REF 4	STAINLESS STEEL, ORGANIC COATING	4
—	1	1			CABLE CLAMP	ZINC-COATED STEEL, PAINTED TO METALIC SILVER	3
—	1	1			SHIELD (RIGHT HALF)	ZINC-COATED STEEL, PAINTED TO METALIC SILVER	2
—	1	1			SHIELD (LEFT HALF)	ZINC-COATED STEEL, PAINTED TO METALIC SILVER	1

LTR.	変更 (REVISION RECORD)	DR.	CHK.	DATE
G1	ECR-24-225081	RK	FJS	27FEB 2025
G	REVISED PER ECO-20-007658	KR	MZ	12JUN 2020
F	REVISED	T.N	N.Y	09SEP 2013
E	J-3989			
D	ECN. J5-3770	YSA	NO	9/6/95
C1	ADDED NOTE 2. (P-DWG REV-F)	Y.T	NO	12/12/93
C	REVISED (P-DWG REV. D)	[illegible]	[illegible]	2/6/93
B	REVISED (P-DWG REV. C)	T.K	N.O	12/4/92
A	REVISED (P-DWG REV. B)	T.A	[illegible]	8/7/92
0	RELEASED (P-DWG REV. A1)		[illegible]	8/30/91

番号 (NUMBER) C-171074

組立部品 (REQUIRED PER ASSEMBLY)		
7-171074	171074	171074

記事 (DESCRIPTION)

© COPYRIGHT 2012 BY Tyco Electronics Japan G.K.

参考図面 (CUSTOMER COPY REFERENCE ONLY)

TE Connectivity

材料 (MATERIAL): 上参照
仕上 (FINISH): 上参照
DR.
CHK. Mianoka 8/30/91
DE.
APP. [illegible] Sep 1 '91

抱合電線断面積 (WIRE RANGE): — mm² (AWG)
被覆外径 (INSULATION DIA.): — mm (IN)
一般公差 TOLERANCE EXCEPT AS NOTED ±0.4 ±1°0
尺度 (SCALE): —
分類 (CLASS): —
型式 (TYPE): —

LOC J | SIZE B | 番号 (NO) C-171074 | REV. G1

名称 (NAME): 75極180° シールド

単位：粍 DIMENSIONS IN MM. DO NOT SCALE PRINT

AMP J 030-2