TTC-6P-3-5DC-PT-I - Surge protection device

1061385

https://www.phoenixcontact.com/us/products/1061385

Please be informed that the data shown in this PDF document is generated from our online catalog. Please find the complete data in the user documentation. Our general terms of use for downloads are valid.



Surge protection, consisting of protective plug and base element, with integrated status indicator for a 3-wire floating signal circuit with high nominal current.

Your advantages

- Space-saving and cost-saving with a narrow overall width of just 6 mm
- Continuous monitoring of protective devices, plus mechanical status indicator with optional remote signaling
- Finding the right product for all possible requirements in MCR applications is easy, thanks to the complete range of products with customized features
- Easy testing and documentation with CHECKMASTER 2 with pluggable protective modules
- The signal is not influenced during maintenance work, thanks to the impedance-neutral insertion and removal of protective plugs

Commercial data

Item number	1061385
Packing unit	1 pc
Minimum order quantity	1 pc
Sales key	CL23
Product key	CL2162
Catalog page	Page 143 (C-4-2019)
GTIN	4055626712895
Weight per piece (including packing)	41.3 g
Weight per piece (excluding packing)	40 g
Customs tariff number	85363010
Country of origin	DE

Technical data

Product properties

Product type	Surge protection for MCR technology
Product family	TERMITRAB complete
IEC test classification	C1
	C2
	C3
Type	DIN rail module, two-section, divisible

Insulation characteristics

Overvoltage category	III
Pollution degree	2

Electrical properties

Nominal voltage U_N	5 V DC

Connection data

Connection method	Push-in connection
Conductor cross section flexible	0.2 mm² ... 2.5 mm²
Conductor cross section rigid	0.2 mm² ... 4 mm²
Conductor cross section AWG	24 ... 12

Dimensions

Dimensional drawing	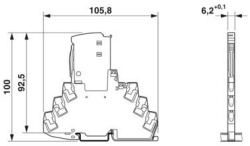
Width	6.2 mm +0.1 mm
Height	105.8 mm
Depth	100 mm (incl. DIN rail 7.5 mm)

Material specifications

Color (Base element)	gray (RAL 7042)
Color (Male connector)	light grey (RAL 7035)
Flammability rating according to UL 94	V-0
Insulating material	PBT
Housing material	PBT

Mechanical properties

Mechanical data

Open side panel	No

Protective circuit

Direction of action	Line-Line & Line-Signal Ground/Shield & optional Signal Ground/Shield-Earth Ground
Maximum continuous voltage U_C	5 V DC
	3 V AC
Rated current	5 A (55 °C)
Operating effective current I_C at U_C	≤ 1 mA
Residual current I_{PE}	≤ 1 µA
Nominal discharge current I_n (8/20) µs (line-line)	0.5 kA
Nominal discharge current I_n (8/20) µs (line-ground)	5 kA
Total discharge current I_{total} (8/20) µs	10 kA
Voltage protection level U_p (line-line)	≤ 39 V (C1 - 1 kV / 500 A)
	≤ 25 V (C3 - 100 A)
	≤ 25 V (C3 - 25 A)
Voltage protection level U_p (line-earth)	≤ 700 V (C1 - 1 kV / 500 A)
	≤ 900 V (C2 - 10 kV / 5 kA)
Response time t_A (line-line)	≤ 1 ns
Response time t_A (line-earth)	≤ 100 ns
Input attenuation aE, sym.	typ. 0.3 dB (≤ 7 MHz / 150 Ω)
Cut-off frequency fg (3 dB), sym. in 150 Ω system	typ. 33 MHz
Capacity (Core-Core)	typ. 50 pF
Capacity (Core-Earth)	typ. 50 pF
Resistance per path	< 0.1 Ω
Surge protection fault message	optical
Max. required back-up fuse	5 A (F)
Impulse durability (line-line)	C1 - 1 kV / 500 A
	C3 - 100 A
Impulse durability (line-earth)	C1 - 1 kV / 500 A
	C2 - 10 kV / 5 kA
Pulse reset time (line-line)	≤ 30 ms
Pulse reset time (line-earth)	≤ 30 ms

Environmental and real-life conditions

Ambient conditions

Degree of protection	IP20
Ambient temperature (operation)	-40 °C ... 85 °C
Ambient temperature (storage/transport)	-40 °C ... 85 °C
Altitude	≤ 4000 m (amsl)
Permissible humidity (operation)	5 % ... 95 %

Approvals

Conformity/Approvals

UL, USA / Canada	Class I, Div. 2, Groups A, B, C, D T4A

Standards and regulations

Standards/specifications	IEC 61643-21
Note	2000 + corrigendum 2001 + A1:2008, modified + A2:2012

EN 61643-21

Standards/specifications	EN 61643-21
Note	2001 + A1:2009 + A2:2013

Mounting

Mounting type	DIN rail: TH 35 - 7.5 mm

Drawings

Dimensional drawing

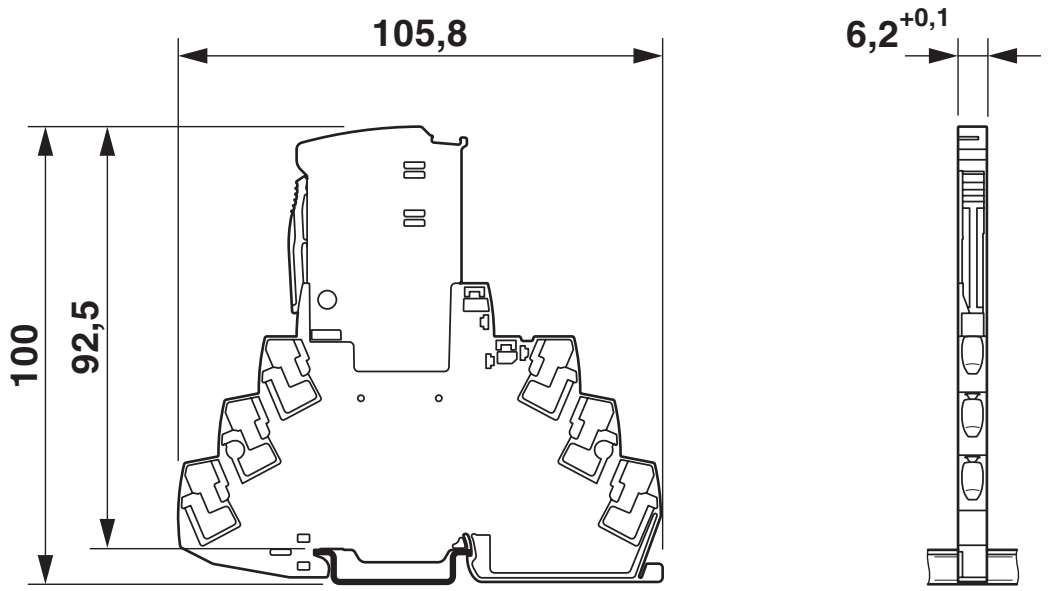

Circuit diagram

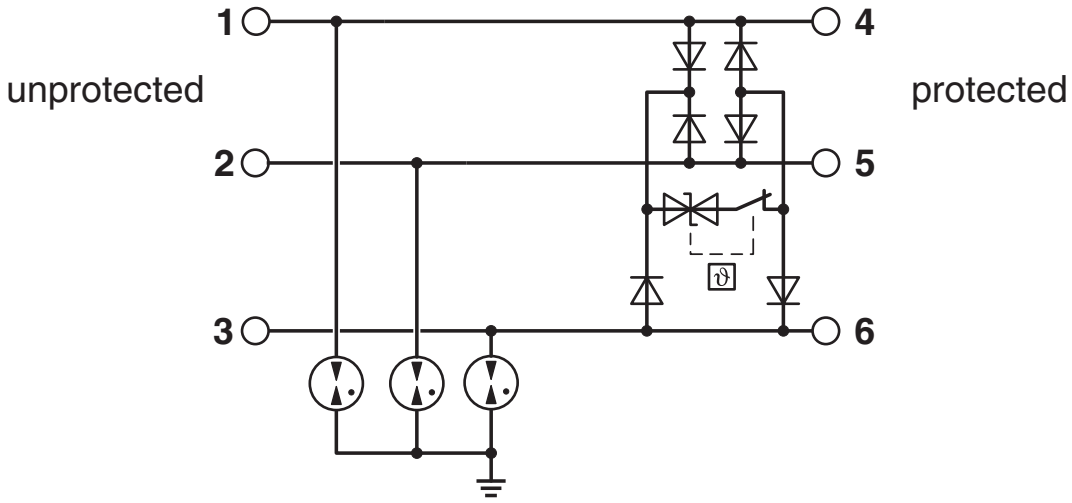

Diagram

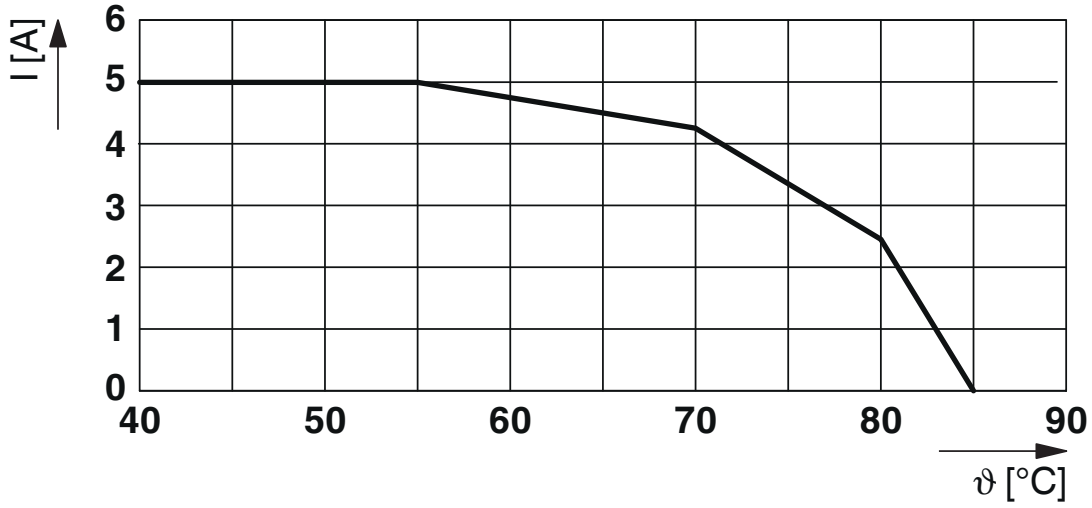

Approvals

To download certificates, visit the product detail page: https://www.phoenixcontact.com/us/products/1061385

UL Listed
Approval ID: FILE E 138168

DNV GL
Approval ID: TAE000027G

UAE-RoHS
Approval ID: 22-06-16781

cUL Listed
Approval ID: FILE E 333250

UL Listed
Approval ID: FILE E 333250

cULus Listed

Classifications

ECLASS

ECLASS-11.0	27130807
ECLASS-13.0	27171501

ETIM

ETIM 9.0	EC001625

UNSPSC

UNSPSC 21.0	39121600

Environmental product compliance

EU RoHS

Fulfills EU RoHS substance requirements	Yes
Exemption	7(a)

China RoHS

Environment friendly use period (EFUP)	EFUP-50
	An article-related China RoHS declaration table can be found in the download area for the respective article under "Manufacturer declaration". For all articles with EFUP-E, no China RoHS declaration table issued and required.

EU REACH SVHC

REACH candidate substance (CAS No.)	Lead(CAS: 7439-92-1)
SCIP	ae7cc98a-23e7-41f3-b7f8-f8945b3db0a1

Accessories

TTC-6-FMRS-PT - Remote signaling set

2907811

https://www.phoenixcontact.com/us/products/2907811



Module set for the optical monitoring and floating remote signaling of adjacent surge protective devices in the TERMITRAB complete or CLIXTRAB product family. Suitable for directly grounded DIN rails.

SSA 3-6 - Shield connection

2839295

https://www.phoenixcontact.com/us/products/2839295



Shield fast connection for 3 ... 6 mm cable diameter. Potential connecting cable: 200 mm, 1 mm^2, color: black

SSA 5-10 - Shield connection

2839512

https://www.phoenixcontact.com/us/products/2839512



Shield fast connection for 5 ... 10 mm cable diameter. Potential connecting cable: 200 mm, 1 mm^2, color: black

X-PEN 0,35 - Marker pen

0811228

https://www.phoenixcontact.com/us/products/0811228



Marker pen without ink cartridge, for manual labeling of markers, labeling extremely wipe-proof, line thickness 0.35 mm

TTC-6P-3-5DC-PT-I - Surge protection device

1061385

https://www.phoenixcontact.com/us/products/1061385

TTC-6P-3-5DC-I-P - Surge protection plug

1061386

https://www.phoenixcontact.com/us/products/1061386



Surge protection plug with integrated status indicator on the module for a 3-wire floating signal circuit with a high nominal current. Nominal voltage: 5 V DC

Phoenix Contact 2024 © - all rights reserved
https://www.phoenixcontact.com

Phoenix Contact USA
586 Fulling Mill Road
Middletown, PA 17057, United States
(+717) 944-1300
info@phoenixcon.com