Half-Bridge MOSFET Driver for Switching Power Supplies

FEATURES

- 4.5- to 5.5-V Operation
- Undervoltage Lockout
- 250-kHz to 1-MHz Switching Frequency
- Shutdown Quiescent Current <5 μA
- One Input PWM Signal Generates Both Drive
- Bootstrapped High-Side Drive
- Operates from 4.5- to 30-V Supply
- TTL/CMOS Compatible Input Levels
- 1-A Peak Drive Current
- Break-Before-Make Circuit

APPLICATIONS

- Multiphase Desktop CPU Supplies
- Single-Supply Synchronous Buck Converters
- Mobile Computing CPU Core Power Converters
- Standard-Synchronous Converters
- High Frequency Switching Converters

DESCRIPTION

The Si9912 is a dual MOSFET high-speed driver with break-before-make. It is designed to operate in high frequency dc-dc switchmode power supplies. The high-side driver is bootstrapped to handle the high voltage slew rate associated with "floating" high-side gate drivers. Each driver is capable of switching a 3000-pF load with 60-ns propogation delay and 25-ns transition time. The Si9912 comes with an internal break-before-make feature to prevent shoot-through current in the external MOSFETs. A shutdown pin is used to enable the driver. When disabled, the quiescent current of the driver is less than 5 μA.

The Si9912 is available in both standard and lead (Pb)-free, 8-pin SOIC packages for operation over the industrial operation range (–40°C to 85°C).

FUNCTIONAL BLOCK DIAGRAM AND TRUTH TABLE

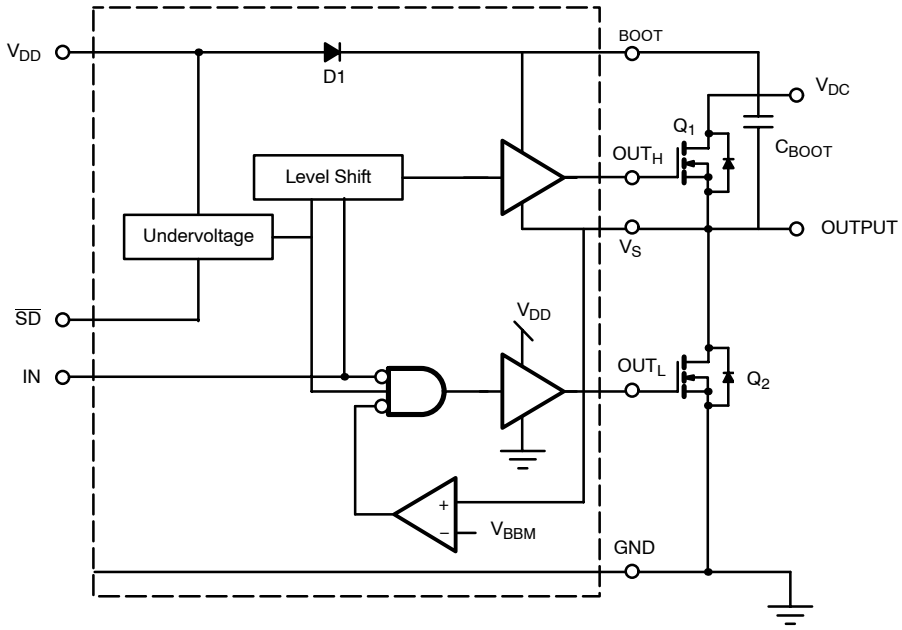

TRUTH TABLE				
V_S	$\overline{SD}$	IN	V_{OUTL}	V_{OUTH}
L	L	L	L	L
L	L	H	L	L
L	H	L	H	L
L	H	H	L	H
H	L	L	L	L
H	L	H	L	L
H	H	L	L	L
H	H	H	L	H

ABSOLUTE MAXIMUM RATINGS (T_A = 25°C UNLESS OTHERWISE NOTED)

Parameter	Symbol	Limit	Unit
Low Side Driver Supply Voltage	V_{DD}	7.0	V
Input Voltage on IN	V_{IN}	−0.3 to V_{DD} +0.3	
Shutdown Pin Voltage	$V_{\overline{SD}}$	−0.3 to V_{DD} +0.3	
Bootstrap Voltage	V_{BOOT}	35.0	
High Side Driver (Bootstrap) Supply Voltage	$V_{BOOT} - V_S$	7.0	
Operating Junction Temperature Range	T_J	−40 to 125	°C
Storage Temperature Range	T_{stg}	−40 to 150	
Power Dissipation (Note a and b)	P_D	830	mW
Thermal Impedance	θ_{JA}	125	°C/W
Lead Temperature (soldering 10 Sec)		300	°C

Notes
a. Device mounted with all leads soldered to P.C. Board
b. Derate 8.3 W/°C above 25°C

Stresses beyond those listed under "Absolute Maximum Ratings" may cause permanent damage to the device. These are stress ratings only, and functional operation of the device at these or any other conditions beyond those indicated in the operational sections of the specifications is not implied. Exposure to absolute maximum rating conditions for extended periods may affect device reliability.

RECOMMENDED OPERATING CONDITIONS

Parameter	Symbol	Limit	Unit
Bootstrap Voltage (High-Side Drain Voltage)	V_{BOOT}	4.5 to 30	V
Logic Supply	V_{DD}	4.5 to 5.5	
Bootstrap Capacitor	C_{BOOT}	100 n to 1 µ	F
Ambient Temperature	T_A	−40 to 85	°C

SPECIFICATIONS

Parameter	Symbol	Test Conditions Unless Specified V_{DD} = 4.5 to 5.5 V V_{BOOT} = 4.5 to 30 V, T_A = −40 to 85°C	Limits Min[a]	Limits Typ[b]	Limits Max[a]	Unit
Power Supplies						
V_{DD} Supply	V_{DD}		4.5			µA
I_{DD} Supply	$I_{DD1(en)}$	$\overline{SD}$ = H, IN = H, V_S = 0 V			1000	
I_{DD} Supply	$I_{DD2(en)}$	$\overline{SD}$ = H, IN = L, V_S = 0 V			500	
I_{DD} Supply	$I_{DD3(dis)}$	$\overline{SD}$ = L, IN = X, V_S = 0 V			5	
I_{DD} Supply	$I_{DD4(en)}$	$\overline{SD}$ = H, IN = X, V_S = 25 V, V_{BOOT} = 30 V			200	
I_{DD} Supply	$I_{DD5(dis)}$	$\overline{SD}$ = L, IN = X, V_S = 25 V, V_{BOOT} = 30 V			5	
I_{DD} Supply	$I_{DD(en)}$	F_{IN} = 300 kHz, $\overline{SD}$ = High, Driving Si4412DY		9		mA
	$I_{DD(dis)}$	F_{IN} = 300 kHz, $\overline{SD}$ = Low, Driving Si4412DY		3		µA
Boot Strap Current	I_{BOOT}	V_{BOOT} = 30 V, V_S = 25 V, V_{OUTH} = High	0.9		3	mA
Reference Voltage						
Break-Before-Make Reference Voltage	V_{BBM}		1.1		3	V
Logic Inputs ($\overline{SD}$, IN)						
Input High	V_{IH}		0.7 × V_{DD}		V_{DD} + 0.3	V
Input Low	V_{IL}		−0.3		0.3 × V_{DD}	
Undervoltage Lockout						
V_{DD} Undervoltage	V_{UVL}	V_{DD} Rising	3.7		4.3	V
V_{DD} Undervoltage Hysteresis	V_{HYST}			0.4		

SPECIFICATIONS

Parameter	Symbol	Test Conditions Unless Specified V_{DD} = 4.5 to 5.5 V V_{BOOT} = 4.5 to 30 V, T_A = −40 to 85°C	Limits			Unit
			Min[a]	Typ[b]	Max[a]	
Bootstrap Diode						
Diode Forward Voltage	VF_{D1}	Forward Current = 100 mA		0.8	1	V
Output Drive Current						
OUT_H Source Current	$I_{OUT(H+)}$	$V_{BOOT} - V_S$ = 3.7 V, $V_{OUTH} - V_S$ = 2 V			−0.4	A
OUT_H Sink Current	$I_{OUT(H-)}$	$V_{BOOT} - V_S$ = 3.7 V, $V_{OUTH} - V_S$ = 1 V	0.4			
OUT_L Source Current	$I_{OUT(L+)}$	V_{DD} = 4.5 V, V_{OUTL} = 2 V			−0.4	
OUT_L Sink Current	$I_{OUT(L-)}$	V_{DD} = 4.5 V, V_{OUTL} = 1 V	0.6			
Timing (C_{LOAD} = 3 nF)						
OUT_L Off Propagation Delay	$t_{pdl(OUTL)}$	V_{DD} = 4.5 V		30		ns
OUT_L On Propagation Delay	$t_{pdh(OUTL)}$			20		
OUT_H Off Propagation Delay	$t_{pdl(OUTH)}$	$V_{BOOT} - V_S$ = 4.5 V		30		
OUT_H On Propagation Delay	$t_{pdh(OUTH)}$			20		
OUT_L Turn On Time	$t_{r(OUTL)}$	OUT_L = 10 to 90%		25		
OUT_L Turn Off Time	$t_{f(OUTL)}$	OUT_L = 90 to 10%		25		
OUT_H Turn On Time	$t_{r(OUTH)}$	$OUT_H - V_S$ = 10 to 90%		30		
OUT_H Turn Off Time	$t_{f(OUTH)}$	$OUT_H - V_S$ = 90 to 10%		20		

Notes
a. The algebraic convention whereby the most negative value is a minimum and the most positive a maximum, is used in this data sheet.
b. Typical values are for DESIGN AID ONLY, not guaranteed nor subject to production testing.

TIMING WAVEFORMS

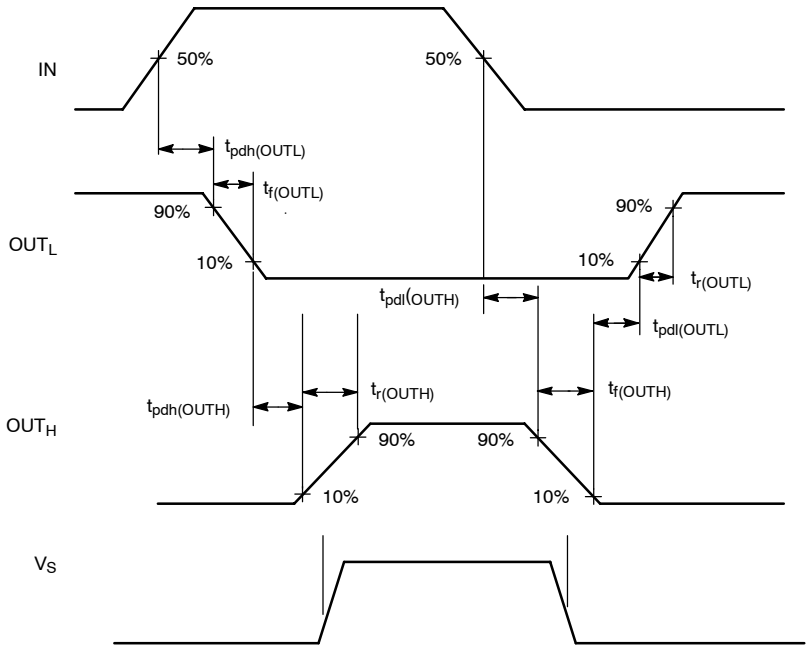

PIN CONFIGURATION

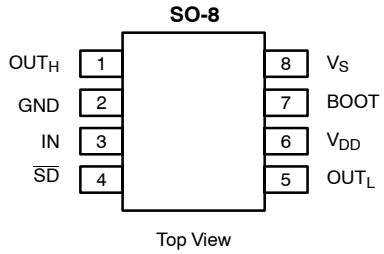

PIN DESCRIPTION

Pin Number	Name	Function
1	OUT_H	Output drive for upper MOSFET.
2	GND	Ground supply
3	IN	CMOS level input signal. Controls both output drives.
4	$\overline{SD}$	Shutdown pin
5	OUT_L	Output drive for lower MOSFET.
6	V_{DD}	Input power supply
7	BOOT	Floating bootstrap supply for the upper MOSFET
8	V_S	Floating GND for the upper MOSFET. V_S is connected to the buck switching node and the source side of the upper MOSFET.

ORDERING INFORMATION

Part Number	Temperature Range	Package
Si9912DY	−40 to 85°C	Bulk
Si9912DY-T1		Tape and Reel
Si9912DY-T1—E3 (Lead (Pb)-Free)		

Eval Kit	Temperature Range	Board Type
Si9912DB	−40 to 85°C	Surface Mount

TYPICAL WAVEFORMS

Driver On Switch Delay

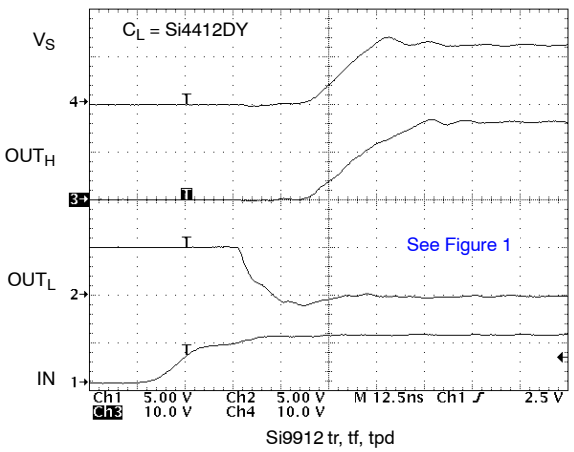

Si9912 tr, tf, tpd

Driver Off Switch Delay

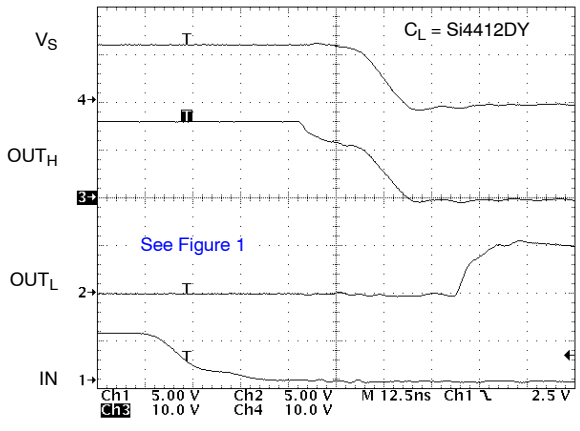

Si9912 tr, tf, tpd

TYPICAL CHARACTERISTICS (25°C UNLESS NOTED)

I_{DD} Supply Current vs. Frequency

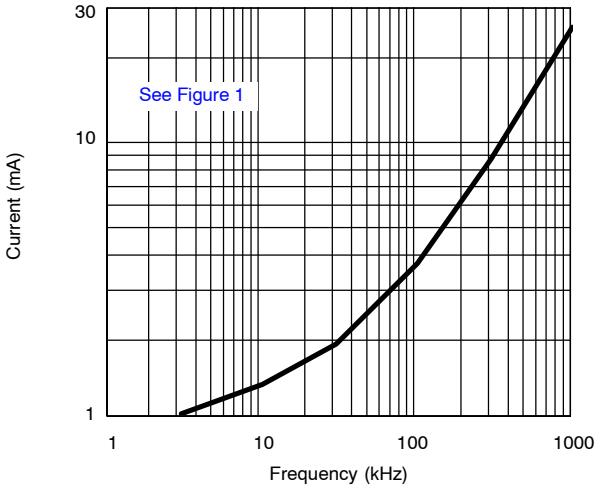

Rise and Fall Time vs. C_{LOAD}

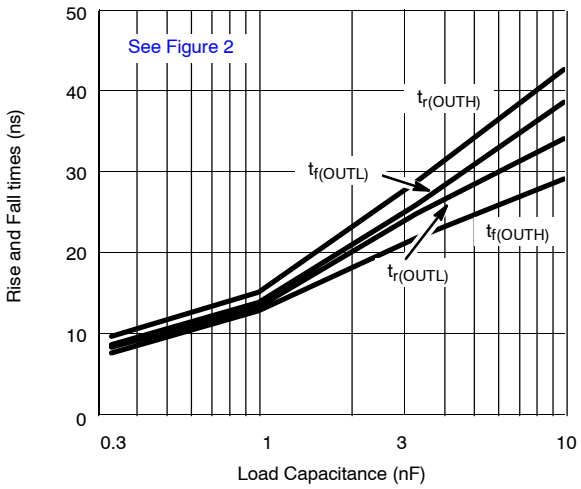

$V_{OUT(H+)}$ vs. Supply

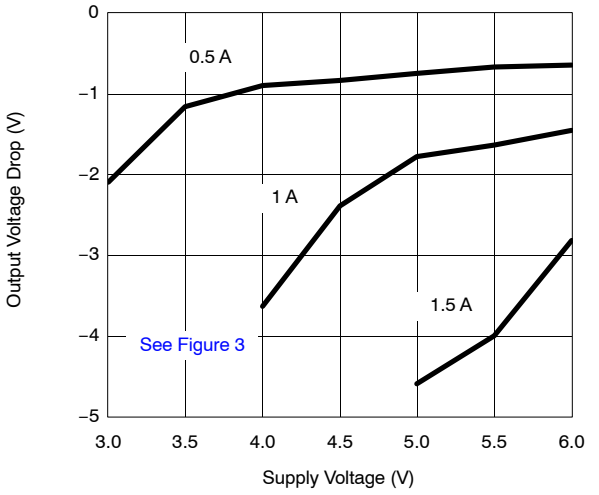

$V_{OUT(H-)}$ vs. Supply

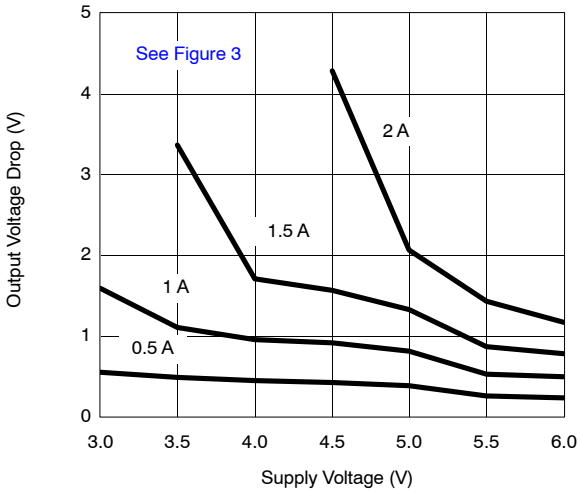

$V_{OUT(L+)}$ vs. Supply

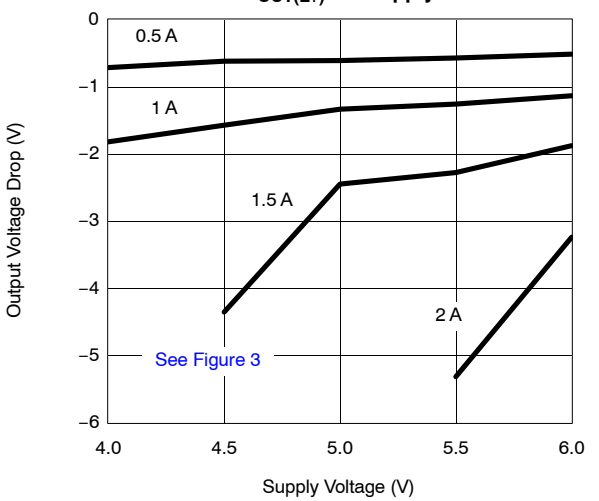

$V_{OUT(L-)}$ vs. Supply

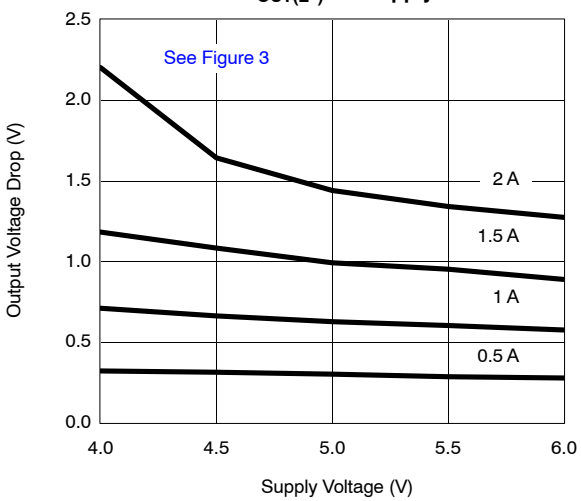

TYPICAL CHARACTERISTICS (25°C UNLESS NOTED)

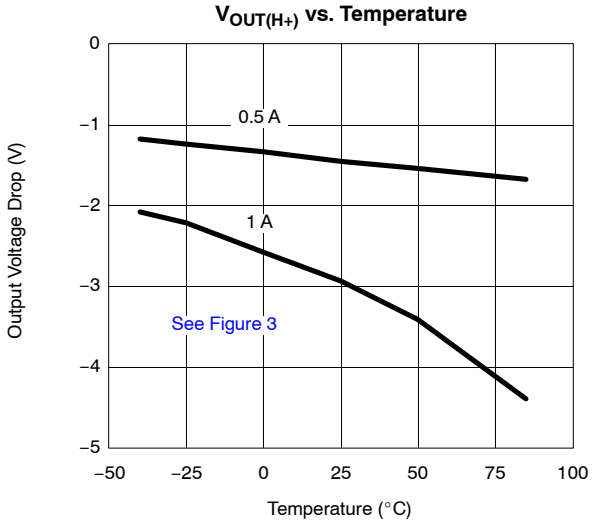

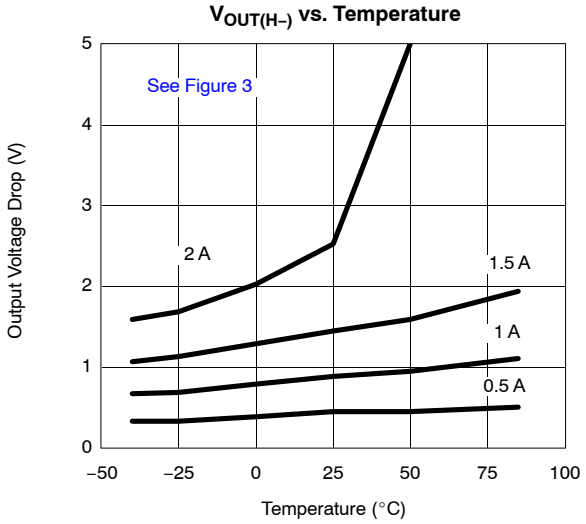

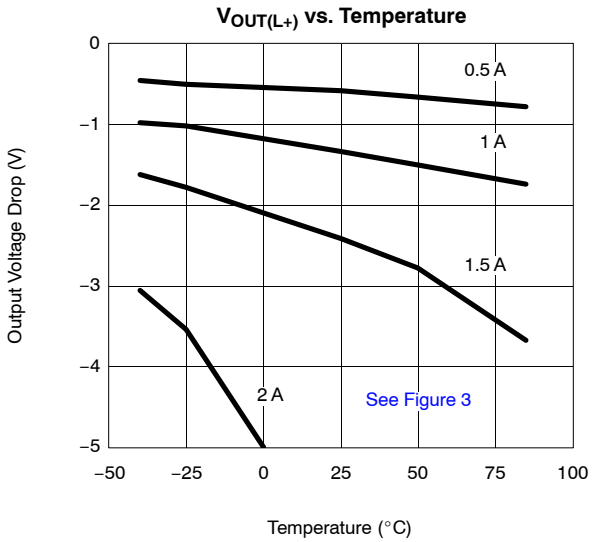

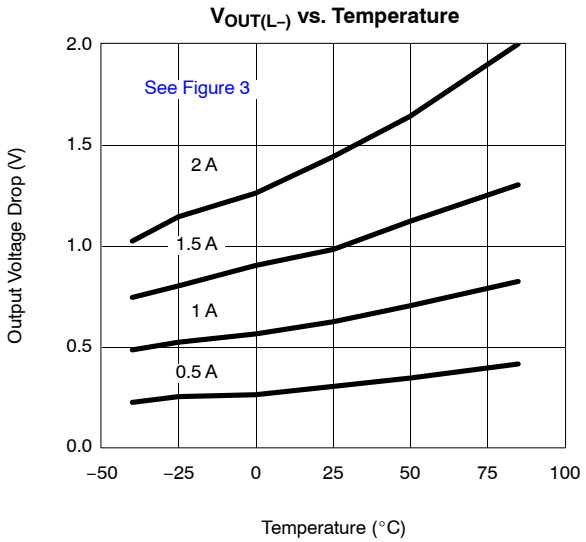

THEORY OF OPERATION

Break-Before-Make Function

The Si9912 has an internal break-before-make function to ensure that both high-side and low-side MOSFETs are not turned on at the same time. The high-side drive (OUT_H) will not turn on until the low-side gate drive voltage (measured at the OUT_L pin) is less than V_{BBM}, thus ensuring that the low-side MOSFET is turned off. The low-side drive (OUT_L) will not turn on until the voltage at the MOSFET half-bridge output (measured at the V_S pin) is less than V_{BBM}, thus ensuring that the high-side MOSFET is turned off.

Under Voltage Lockout Function

The Si9912 has an internal under-voltage lockout feature to prevent driving the MOSFET gates when the supply voltage (at V_{DD}) is less than the under-voltage lockout specification (V_{UVL}). This prevents the output MOSFETs from being turned on without sufficient gate voltage to ensure they are fully on. There is hysteresis included in this feature to prevent lockout from cycling on and off.

Bootstrap Supply Operation
(see Functional Block Diagram)

The power to drive the high-side MOSFET (Q2) gate comes from the bootstrap capacitor (C_{BOOT}). This capacitor charges through D1 during the time when the low-side MOSFET is on (V_S is at GND potential), and then provides the necessary charge to turn on the high-side MOSFET. C_{BOOT} should be sized to be greater than ten times the high-side MOSFET gate capacitance, and large enough to supply the bootstrap current (I_{BOOT}) during the high-side on time, without significant voltage droop.

Shutdown ($\overline{SD}$)
(shutdown input, active low)

When this pin is high, the IC operates normally. When this pin is low, both high- and low-side MOSFETs are turned off .

Layout Considerations

There are a few critical layout considerations for these parts. Firstly, the IC must be decoupled as closely as possible to the power pins. Secondly the IC should be placed physically close to the high- and low-side MOSFETs it is driving. The major consideration is that the MOSFET gates must be charged or discharged in a few nanoseconds, and the peak current to do this is of the order of 1 A. This current must flow from the decoupling and bootstrap capacitors to the IC, and from the output driver pin to the MOSFET gate, returning from the MOSFET source to the IC. The aim of the layout is to reduce the parasitic inductance of these current paths as much as possible. This is accomplished by making these traces as short as possible, and also running trace and its current return path adjacent to each other.

APPLICATIONS

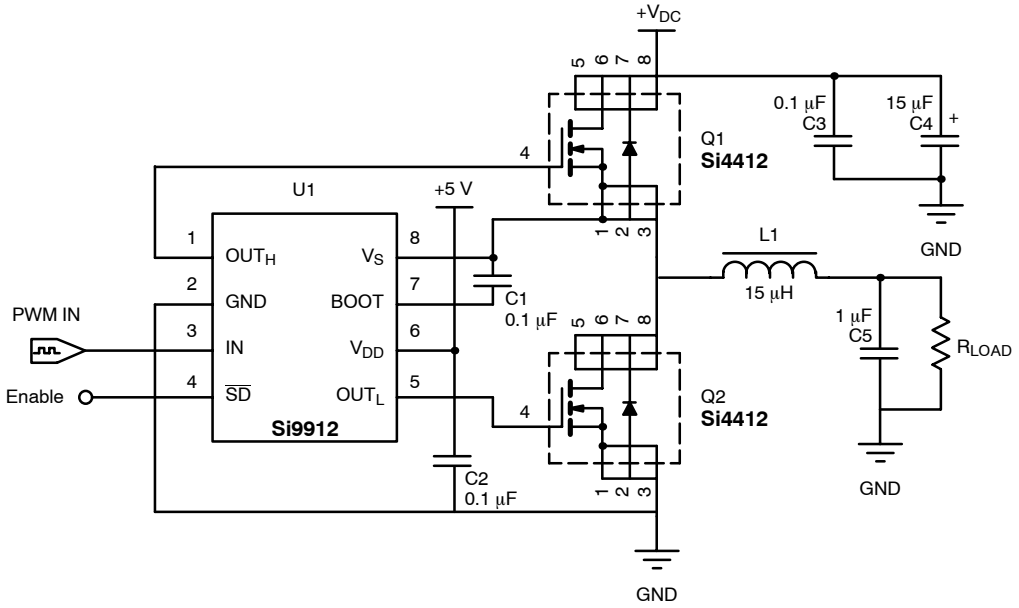

FIGURE 1. Typical Applications Schematic Circuit Used to Obtain Typical Rising and Falling Switching Waveforms

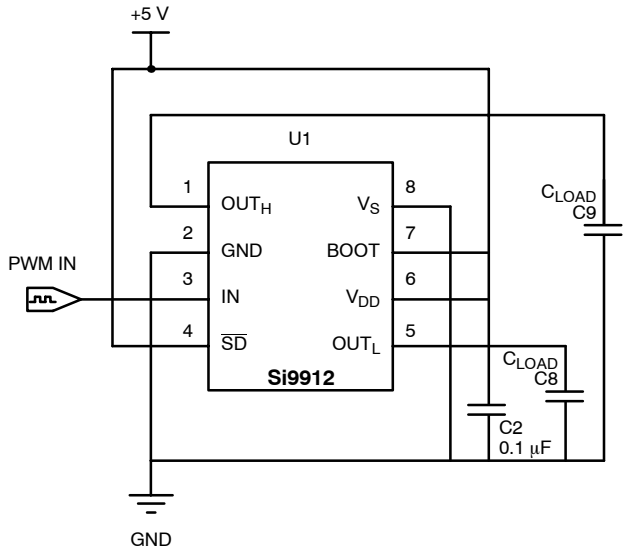

FIGURE 2. Capacitive Load Test Circuit Used to Measure Rise and Fall Times vs. Capacitance

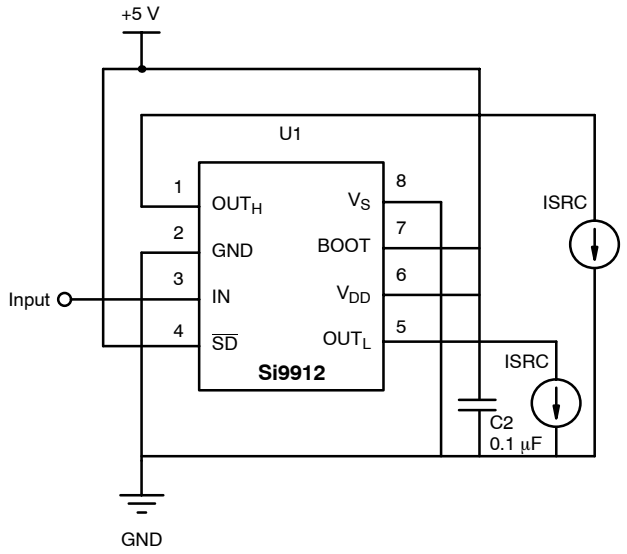

FIGURE 3. Load Test Schematic Circuit Used to Measure Driver Output Impedance

SOIC (NARROW): 8-LEAD
JEDEC Part Number: MS-012

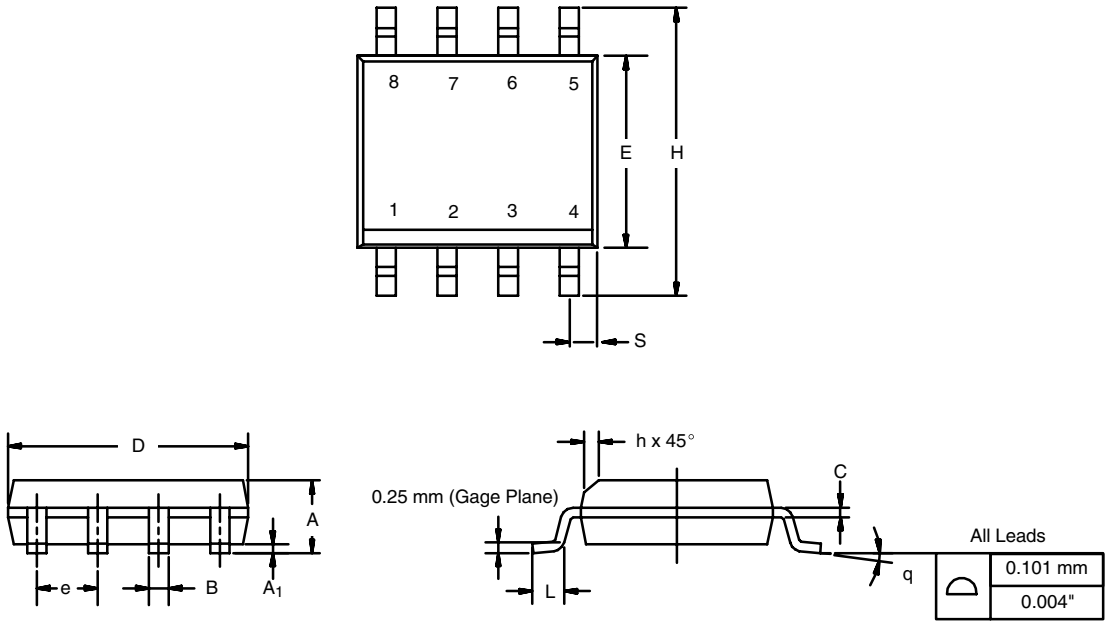

DIM	MILLIMETERS		INCHES	
	Min	Max	Min	Max
A	1.35	1.75	0.053	0.069
A_1	0.10	0.20	0.004	0.008
B	0.35	0.51	0.014	0.020
C	0.19	0.25	0.0075	0.010
D	4.80	5.00	0.189	0.196
E	3.80	4.00	0.150	0.157
e	1.27 BSC		0.050 BSC	
H	5.80	6.20	0.228	0.244
h	0.25	0.50	0.010	0.020
L	0.50	0.93	0.020	0.037
q	0°	8°	0°	8°
S	0.44	0.64	0.018	0.026
ECN: C-06527-Rev. I, 11-Sep-06 DWG: 5498				

Disclaimer

ALL PRODUCT, PRODUCT SPECIFICATIONS AND DATA ARE SUBJECT TO CHANGE WITHOUT NOTICE TO IMPROVE RELIABILITY, FUNCTION OR DESIGN OR OTHERWISE.

Vishay Intertechnology, Inc., its affiliates, agents, and employees, and all persons acting on its or their behalf (collectively, “Vishay”), disclaim any and all liability for any errors, inaccuracies or incompleteness contained in any datasheet or in any other disclosure relating to any product.

Vishay makes no warranty, representation or guarantee regarding the suitability of the products for any particular purpose or the continuing production of any product. To the maximum extent permitted by applicable law, Vishay disclaims (i) any and all liability arising out of the application or use of any product, (ii) any and all liability, including without limitation special, consequential or incidental damages, and (iii) any and all implied warranties, including warranties of fitness for particular purpose, non-infringement and merchantability.

Statements regarding the suitability of products for certain types of applications are based on Vishay's knowledge of typical requirements that are often placed on Vishay products in generic applications. Such statements are not binding statements about the suitability of products for a particular application. It is the customer's responsibility to validate that a particular product with the properties described in the product specification is suitable for use in a particular application. Parameters provided in datasheets and / or specifications may vary in different applications and performance may vary over time. All operating parameters, including typical parameters, must be validated for each customer application by the customer's technical experts. Product specifications do not expand or otherwise modify Vishay's terms and conditions of purchase, including but not limited to the warranty expressed therein.

Hyperlinks included in this datasheet may direct users to third-party websites. These links are provided as a convenience and for informational purposes only. Inclusion of these hyperlinks does not constitute an endorsement or an approval by Vishay of any of the products, services or opinions of the corporation, organization or individual associated with the third-party website. Vishay disclaims any and all liability and bears no responsibility for the accuracy, legality or content of the third-party website or for that of subsequent links.

Vishay products are not designed for use in life-saving or life-sustaining applications or any application in which the failure of the Vishay product could result in personal injury or death unless specifically qualified in writing by Vishay. Customers using or selling Vishay products not expressly indicated for use in such applications do so at their own risk. Please contact authorized Vishay personnel to obtain written terms and conditions regarding products designed for such applications.

No license, express or implied, by estoppel or otherwise, to any intellectual property rights is granted by this document or by any conduct of Vishay. Product names and markings noted herein may be trademarks of their respective owners.

© 2025 VISHAY INTERTECHNOLOGY, INC. ALL RIGHTS RESERVED

THIS DOCUMENT IS SUBJECT TO CHANGE WITHOUT NOTICE. THE PRODUCTS DESCRIBED HEREIN AND THIS DOCUMENT ARE SUBJECT TO SPECIFIC DISCLAIMERS, SET FORTH AT www.vishay.com/doc?91000