Data sheet

M40E-63A523RB0

M4000 Advanced Curtain

SAFETY LIGHT CURTAINS

SICK
Sensor Intelligence.

Illustration may differ

Ordering information

Type	part no.
M40E-63A523RB0	1205303

Other models and accessories ➜ www.sick.com/M4000_Advanced_Curtain

Detailed technical data

Features

System part	Receiver
Resolution	14 mm
Scanning range	10 m
Protective field height	750 mm
Response time	
Without beam coding	16 ms
With beam coding	29 ms
Synchronization	Optical synchronisation

Safety-related parameters

Type	Type 4 (IEC 61496-1)
Safety integrity level	SIL 3 (IEC 61508)
Category	Category 4 (EN ISO 13849)
Performance level	PL e (EN ISO 13849)
PFH_D (mean probability of a dangerous failure per hour)	$28 * 10^{-9}$ (EN ISO 13849)
T_M (mission time)	20 years (EN ISO 13849)
Safe state in the event of a fault	At least one OSSD is in the OFF state.

Functions

	Functions	Delivery status
Restart interlock	✓	Internal
External device monitoring (EDM)	✓	Activated
Beam coding	✓	Uncoded
Configurable status output (ADO)	✓	Contamination (OWS)
Sender test	✓	Deactivated
Configurable scanning range	✓	Low scanning range
Safe SICK device communication via EFI	✓	

[1] The muting functions can only be used in combination with the UE403 muting switching amplifier or a suitable safety controller (e.g., Flexi Classic, Flexi Soft).

Differentiation between man and material (muting)	✓ [1]

[1] The muting functions can only be used in combination with the UE403 muting switching amplifier or a suitable safety controller (e.g., Flexi Classic, Flexi Soft).

Functions - Functions in combination with UE403

Concurrence monitoring	✓
Monitoring of total muting time	✓
Sensor gap monitoring	✓
Belt stop	✓
Muting with override	✓
Exit monitoring	✓
End of muting by ESPE	✓

Interfaces

System connection	
Connection type	Hirschmann male connector M26, 12-pin
Permitted cable length	≤ 50 m [1]
Permitted cross-section	≥ 0.75 mm²
Extension connection	Female connector M12, 5-pin
Configuration method	Via software
Configuration connection	Female connector M8, 4-pin
Display elements	7-segment display, LEDs
Status display	LEDs
End cap with integrated LED on the receiver	✓

[1] Depending on load, power supply and wire cross-section. The technical specifications must be observed.

Electrical data

Protection class	III (IEC 61140)
Supply voltage V_S	24 V DC (19.2 V ... 28.8 V)
Residual ripple	≤ 10 % [1]
Power consumption	≤ 0.8 A [2]
Output signal switching devices (OSSDs)	
Type of output	2 PNP semiconductors, short-circuit protected, cross-circuit monitored [3]
ON state, switching voltage HIGH	24 V DC (V_S – 2.25 V DC ... V_S)
OFF state, switching voltage LOW	≤ 2 V DC
Current-carrying capacity per OSSD	≤ 500 mA
Application diagnostic outputs	
Type of output	PNP semiconductor, short-circuit protected [3]
ON state, switching voltage HIGH	24 V DC (V_S – 4.2 V DC ... V_S)
OFF state, switching voltage LOW	High resistance

[1] Within the limits of V_S.

[2] Without OSSDs, without ADO, without reset required and without UE403.

[3] Applies to the voltage range between –30 V and +30 V.

Current-carrying capacity per OSSD	≤ 100 mA

[1] Within the limits of V_S.

[2] Without OSSDs, without ADO, without reset required and without UE403.

[3] Applies to the voltage range between –30 V and +30 V.

Mechanical data

Housing cross-section	52 mm x 55.5 mm
Housing material	Aluminum alloy ALMGSI 0.5
Surface treatment	Powder coated
Front screen material	Polycarbonate, scratch-resistant coating

Ambient data

Enclosure rating	IP65 (EN 60529)
Ambient operating temperature	–30 °C ... +55 °C
Storage temperature	–30 °C ... +70 °C
Air humidity	15 % ... 95 %, Non-condensing
Vibration resistance	5 g, 10 Hz ... 55 Hz (IEC 60068-2-6)
Shock resistance	10 g, 16 ms (EN 60068-2-29)

Other information

Wave length	850 nm

Certificates

EU declaration of conformity	✓
UK declaration of conformity	✓
ACMA declaration of conformity	✓
Moroccan declaration of conformity	✓
China-RoHS	✓
ULus approval	✓
cUL approval	✓
EC-Type-Examination approval	✓

Classifications

ECLASS 5.0	27272704
ECLASS 5.1.4	27272704
ECLASS 6.0	27272704
ECLASS 6.2	27272704
ECLASS 7.0	27272704
ECLASS 8.0	27272704
ECLASS 8.1	27272704
ECLASS 9.0	27272704
ECLASS 10.0	27272704
ECLASS 11.0	27272704
ECLASS 12.0	27272704
ETIM 5.0	EC002549

ETIM 6.0	EC002549
ETIM 7.0	EC002549
ETIM 8.0	EC002549
UNSPSC 16.0901	46171620

Dimensional drawing

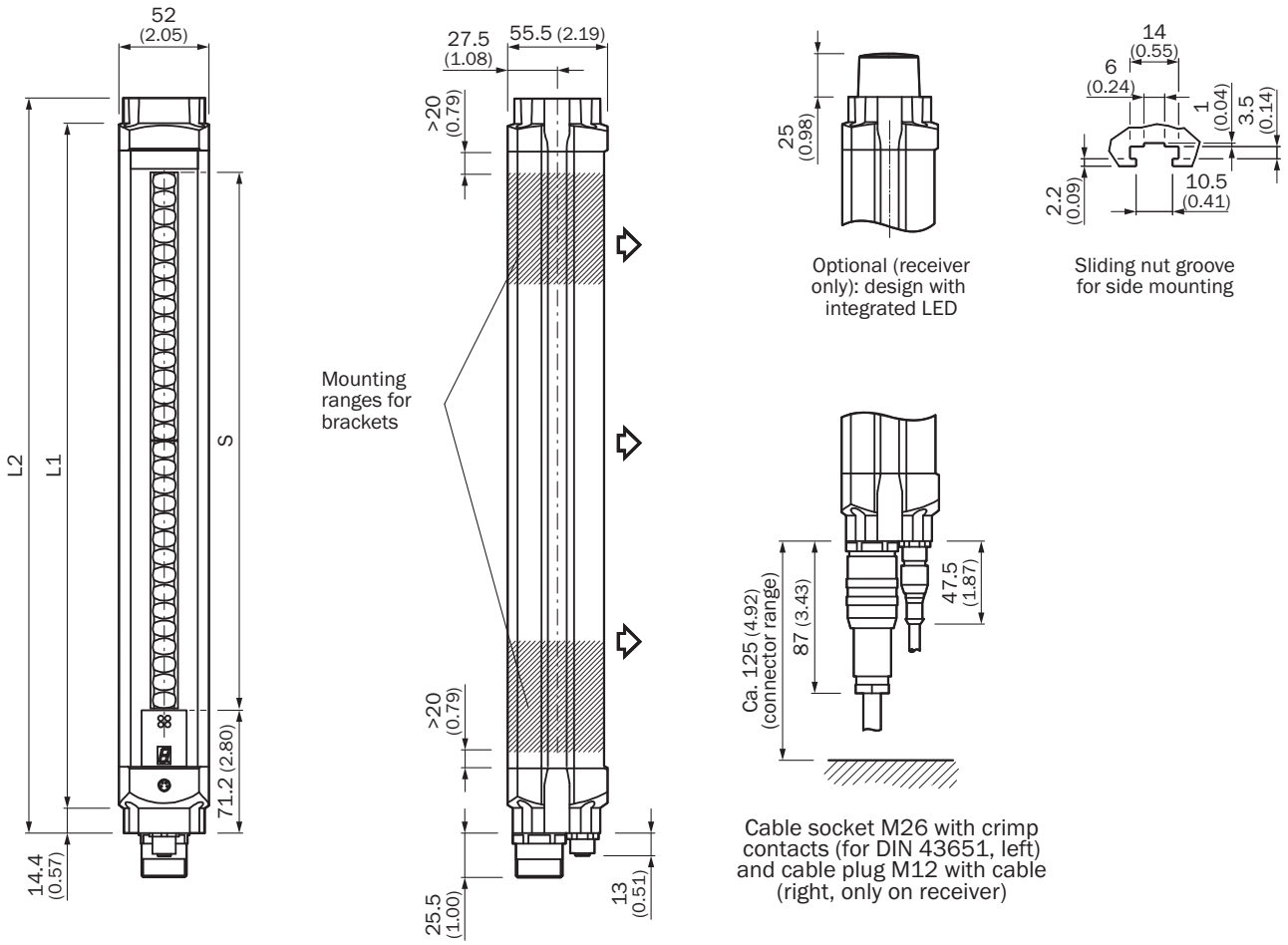

Dimensions in mm (inch)

	L1	L2
300	387	416
450	537	566
600	687	716
750	837	866
900	987	1,016
1,050	1,137	1,166
1,200	1,287	1,316
1,350	1,437	1,466
1,500	1,587	1,616
1,650	1,737	1,766

	L1	L2
1,800	1,887	1,916

Recommended accessories

Other models and accessories ➜ www.sick.com/M4000_Advanced_Curtain

	Brief description	Type	part no.
Commissioning aids and test equipment			
	• **Product:** Alignment aids • **Dimensions (W x H x L):** 19 mm 67.3 mm 66.9 mm • **Description:** Laser alignment aid for various sensors, laser class 2 (IEC 60825). Do not look into the beam!	AR60	1015741
	• **Product:** Alignment aids • **Description:** Adapter AR60 for M4000 and M4000 Curtain	AR60 adapter, M4000	4040006
Mounting systems			
	• **Description:** Mounting kit 1, mounting bracket, rigid, L-shaped, including fixing screws and washers • **Packing unit:** 4 pieces • **Suitable for:** All protective field heights	BEF-3WNGBAST4	7021352
	• **Description:** Mounting kit 12, rotatable, swivel mount • **Packing unit:** 4 pieces • **Suitable for:** All protective field heights	BEF-2SMGEAKU4	2030510
	• **Description:** Mounting kit 6, side bracket, rotatable • **Material:** Zinc diecast • **Details:** Zinc diecast • **Packing unit:** 4 pieces • **Suitable for:** All protective field heights	BEF-1SHABAZN4	2019506

	Brief description	Type	part no.
connectors and cables			
	• **Connection type head A:** Female connector, M26, 12-pin, straight, A-coded • **Description:** Unshielded • **Connection systems:** Crimp contacts • **Permitted cross-section:** 0.5 mm² ... 1.5 mm² • **Note:** 12 crimping contacts enclosed	DOS-0612G000GA3KM(	6020757
	• **Connection type head A:** Male connector, M8, 4-pin, straight • **Connection type head B:** Male connector, USB-A, straight • **Cable:** 10 m, 4-wire, PVC • **Description:** Unshielded	DSL-8U04G10M025KM1	6034575
	• **Connection type head A:** Female connector, M26, 12-pin, straight • **Connection type head B:** Flying leads • **Signal type:** Sensor/actuator cable • **Cable:** 20 m, 12-wire, PVC • **Description:** Sensor/actuator cable, unshielded • **Connection systems:** Flying leads	DOL-0612G20M075KM(	2022549
	• **Connection type head A:** Male connector, M8, 4-pin, straight • **Connection type head B:** Male connector, USB-A, straight • **Cable:** 2 m, 4-wire, PVC • **Description:** Unshielded	DSL-8U04G02M025KM1	6034574
	• **Connection type head A:** Female connector, M26, 12-pin, straight • **Connection type head B:** Flying leads • **Signal type:** Sensor/actuator cable • **Cable:** 15 m, 12-wire, PVC • **Description:** Sensor/actuator cable, unshielded • **Connection systems:** Flying leads	DOL-0612G15M075KM(	2022548
	• **Connection type head A:** Female connector, M26, 12-pin, straight • **Connection type head B:** Flying leads • **Signal type:** Sensor/actuator cable • **Cable:** 10 m, 12-wire, PVC • **Description:** Sensor/actuator cable, unshielded • **Connection systems:** Flying leads	DOL-0612G10M075KM(	2022547
	• **Connection type head A:** Female connector, M26, 12-pin, straight • **Connection type head B:** Flying leads • **Cable:** 5 m, PVC • **Description:** Unshielded • **Connection systems:** Flying leads • **Note:** Without EFI: Pin 9 and 10 not connected	DOL-0610G05M075KM1	2046888
	• **Connection type head A:** Female connector, M26, 12-pin, straight • **Connection type head B:** Flying leads • **Cable:** 10 m, PVC • **Description:** Unshielded • **Connection systems:** Flying leads • **Note:** Without EFI: Pin 9 and 10 not connected	DOL-0610G10M075KM1	2046889
	• **Connection type head A:** Female connector, M26, 12-pin, straight • **Connection type head B:** Flying leads • **Signal type:** Sensor/actuator cable • **Cable:** 5 m, 12-wire, PVC • **Description:** Sensor/actuator cable, unshielded • **Connection systems:** Flying leads	DOL-0612G05M075KM(	2022545
system plugs and extension modules			
	• **Applications:** Muting switching amplifier • **Description:** UE403 muting switching amplifier • **Compatible sensor types:** M4000 Advanced multiple light beam safety devices • **Mounting:** Flexible mounting on the M4000 Advanced or directly in the system	UE403-A0930	1026287

SICK AT A GLANCE

SICK is one of the leading manufacturers of intelligent sensors and sensor solutions for industrial applications. A unique range of products and services creates the perfect basis for controlling processes securely and efficiently, protecting individuals from accidents and preventing damage to the environment.

We have extensive experience in a wide range of industries and understand their processes and requirements. With intelligent sensors, we can deliver exactly what our customers need. In application centers in Europe, Asia and North America, system solutions are tested and optimized in accordance with customer specifications. All this makes us a reliable supplier and development partner.

Comprehensive services complete our offering: SICK LifeTime Services provide support throughout the machine life cycle and ensure safety and productivity.

For us, that is “Sensor Intelligence.”

WORLDWIDE PRESENCE:

Contacts and other locations –www.sick.com