

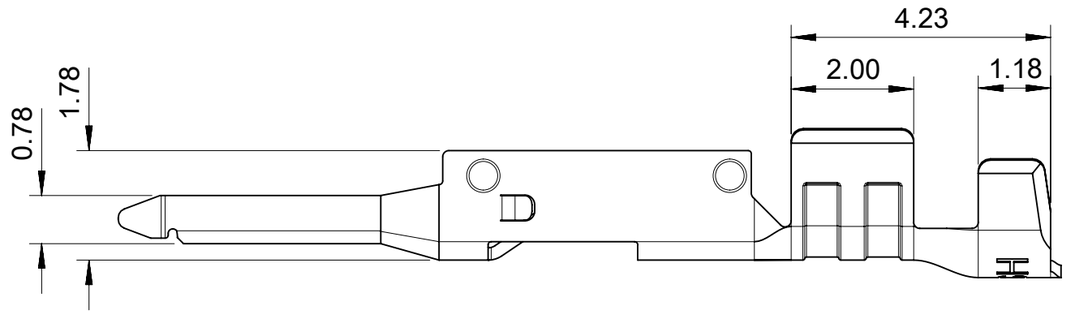

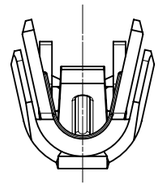

NOTES:
1. MATERIAL: HIGH CONDUCTIVITY COPPER ALLOY.
2. PLATING FINISH SEE CHART IN SHEET 3.
3. PRODUCT SPECIFICATION: 2014471000-PS.
4. PACKAGE SPECIFICATION: 2014471000-PK.
5. THE TERMINAL IS LUBRICATED.
6. THE COMPONENT COMPLIANT TO RoHS DIRECTIVE 2011/65/EU AND ELV DIRECTIVE 2000/53/EC.
7. PRODUCT APPLY TO RECEPTACLE HOUSING OF 200277**** AND 201444****.
8. PARTS CONFORM TO CLASS 'B' REQUIREMENTS OF COSMETIC SPECIFICATION PS-45499-002.
9. APPLICATION SPECIFICATION: 2014471000-AS.
10. RECOMMENDED INSULATOR:
    20AWG WIRE, OD 1.60MM MAX.
    24AWG WIRE, OD 1.30MM MAX.

THIS DRAWING CONTAINS INFORMATION THAT IS PROPRIETARY TO MOLEX ELECTRONIC TECHNOLOGIES, LLC AND SHOULD NOT BE USED WITHOUT WRITTEN PERMISSION

DIMENSION UNITS	SCALE
mm	10:1

GENERAL TOLERANCES (UNLESS SPECIFIED)		
ANGULAR TOL	±	°
4 PLACES	±	
3 PLACES	±	0.1
2 PLACES	±	0.2
1 PLACE	±	0.3
0 PLACES	±	

DRAFT WHERE APPLICABLE MUST REMAIN WITHIN DIMENSIONS

CURRENT REV DESC:

EC NO: 749038
DRWN: GLLI 2023/05/10
CHK'D: XQZHANG 2023/05/25
APPR: XQZHANG 2023/05/25

INITIAL REVISION:
DRWN: GLLI 2018/07/20
APPR: AYIN 2019/04/17

THIRD ANGLE PROJECTION | DRAWING: A3-SIZE | SERIES: 201447

molex

SALES DRAWING OF PLUG TERMINAL

PRODUCT CUSTOMER DRAWING

DOCUMENT NUMBER	DOC TYPE	DOC PART	REVISION
2014471000-SD	PSD	000	B1

MATERIAL NUMBER	CUSTOMER	SHEET NUMBER
	GENERAL MARKET	1 OF 3

DOCUMENT STATUS	P1	RELEASE DATE	2023/05/25 00:11:21

FORMAT: master-tb-prod-A3
REVISION: J1
DATE: 2021/05/01

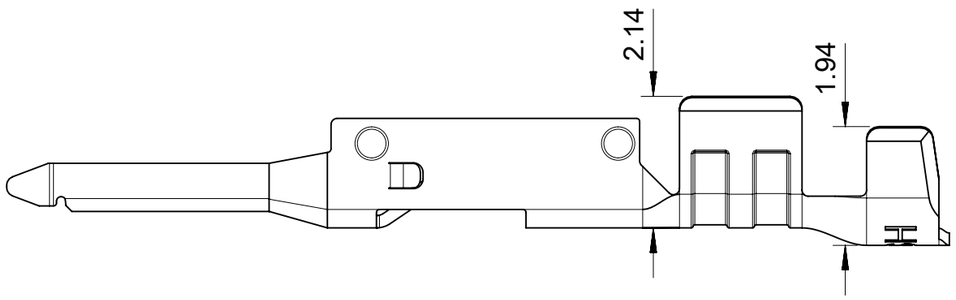

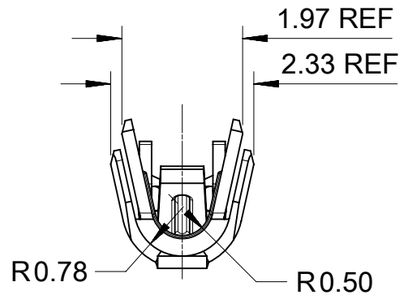

ONLY FOR WIRE OF AWG 20/22

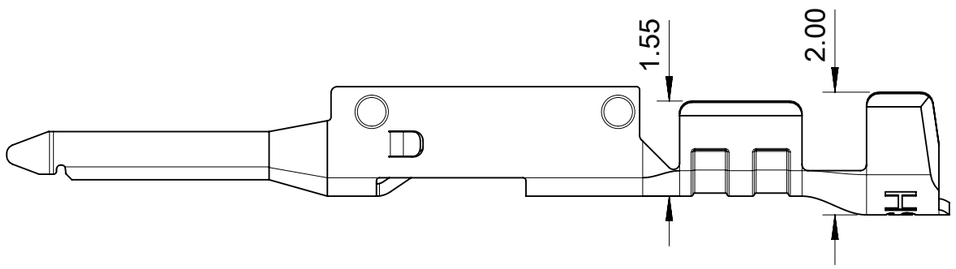

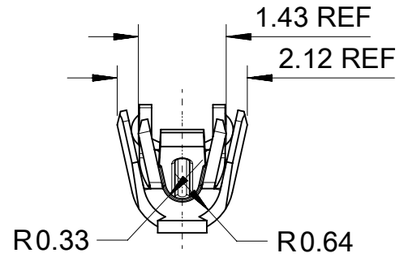

ONLY FOR WIRE OF AWG 24/26

THIS DRAWING CONTAINS INFORMATION THAT IS PROPRIETARY TO MOLEX ELECTRONIC TECHNOLOGIES, LLC AND SHOULD NOT BE USED WITHOUT WRITTEN PERMISSION

DIMENSION UNITS	SCALE
mm	10:1

GENERAL TOLERANCES (UNLESS SPECIFIED)		
ANGULAR TOL	±	°
4 PLACES	±	
3 PLACES	±	0.1
2 PLACES	±	0.2
1 PLACE	±	0.3
0 PLACES	±	

DRAFT WHERE APPLICABLE MUST REMAIN WITHIN DIMENSIONS

CURRENT REV DESC:

EC NO: 749038
DRWN: GLLI 2023/05/10
CHK'D: XQZHANG 2023/05/25
APPR: XQZHANG 2023/05/25

INITIAL REVISION:
DRWN: GLLI 2018/07/20
APPR: AYIN 2019/04/17

molex

SALES DRAWING OF PLUG TERMINAL

PRODUCT CUSTOMER DRAWING

DOCUMENT NUMBER	DOC TYPE	DOC PART	REVISION
2014471000-SD	PSD	000	B1

THIRD ANGLE PROJECTION	DRAWING	SERIES	MATERIAL NUMBER	CUSTOMER	SHEET NUMBER
	A3-SIZE	201447		GENERAL MARKET	2 OF 3

DOCUMENT STATUS	P1	RELEASE DATE	2023/05/25 00:11:21

FORMAT: master-tb-prod-A3
REVISION: J1
DATE: 2021/05/01

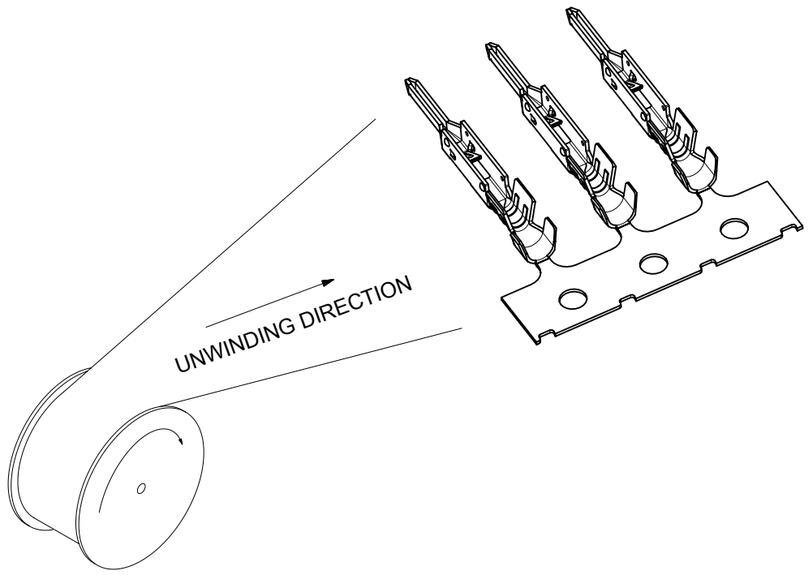

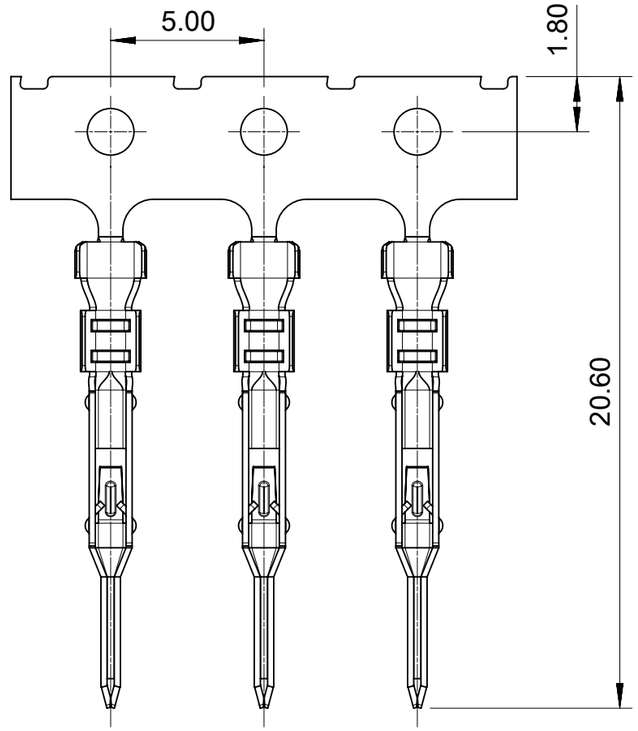

PART NUMBER (WITH LUBE)	PART NUMBER (WITHOUT LUBE)	PLATING TYPE	WIRE SIZE(AWG)
201447-1400	N/A	A	24/26
N/A	201447-1200	B	
201447-1600	201447-1300	C	
N/A	201447-1800	D	
201447-2400	N/A	A	20/22
N/A	201447-2200	B	
201447-2600	201447-2300	C	
N/A	201447-2800	D	

PLATING SPECIFICATION	
A	REFLOW MATTE TIN 2.5 MICRONS MINIMUM OVERALL, UNDER NICKEL PLATING 1.25 MICRONS MINIMUM OVERALL.
B	GOLD PLATING 0.38 MICRONS MINIMUM ON CONTACT AREA, MATTE TIN 2.5 MICRONS MINIMUM ON CRIMP AREA, UNDER NICKEL PLATING 1.25 MICRONS MINIMUM OVERALL.
C	GOLD PLATING 0.76 MICRONS MINIMUM ON CONTACT AREA, MATTE TIN 2.5 MICRONS MINIMUM ON CRIMP AREA, UNDER NICKEL PLATING 1.25 MICRONS MINIMUM OVERALL.
D	GOLD PLATING 0.025 MICRONS MINIMUM ON CONTACT AREA, MATTE TIN 1.5 MICRONS MINIMUM ON CRIMP AREA, UNDER NICKEL PLATING 1.25 MICRONS MINIMUM OVERALL.

THIS DRAWING CONTAINS INFORMATION THAT IS PROPRIETARY TO MOLEX ELECTRONIC TECHNOLOGIES, LLC AND SHOULD NOT BE USED WITHOUT WRITTEN PERMISSION

DIMENSION UNITS	SCALE
mm	5:1

GENERAL TOLERANCES (UNLESS SPECIFIED)	
ANGULAR TOL	± °
4 PLACES	±
3 PLACES	± 0.1
2 PLACES	± 0.2
1 PLACE	± 0.3
0 PLACES	±

DRAFT WHERE APPLICABLE MUST REMAIN WITHIN DIMENSIONS

CURRENT REV DESC:

EC NO: 749038
DRWN: GLLI 2023/05/10
CHK'D: XQZHANG 2023/05/25
APPR: XQZHANG 2023/05/25

INITIAL REVISION:
DRWN: GLLI 2018/07/20
APPR: AYIN 2019/04/17

molex

SALES DRAWING OF PLUG TERMINAL

PRODUCT CUSTOMER DRAWING

DOCUMENT NUMBER	DOC TYPE	DOC PART	REVISION
2014471000-SD	PSD	000	B1

THIRD ANGLE PROJECTION	DRAWING	SERIES	MATERIAL NUMBER	CUSTOMER	SHEET NUMBER
	A3-SIZE	201447		GENERAL MARKET	3 OF 3

DOCUMENT STATUS	P1	RELEASE DATE	2023/05/25 00:11:21

FORMAT: master-lb-prod-A3
REVISION: J1
DATE: 2021/05/01