EV-T2M3SO-00-B - Infrastructure charging socket

1286399

https://www.phoenixcontact.com/us/products/1286399

Please be informed that the data shown in this PDF document is generated from our online catalog. Please find the complete data in the user documentation. Our general terms of use for downloads are valid.



CHARX connect modular, Infrastructure charging socket, square, Basic, without locking actuator, for charging electric vehicles (EV) with alternating current (AC), Type 2, IEC 62196-2, 32 A / 480 V (AC), without single-core wires, Rear panel mounting, M5 thread, housing: black, PHOENIX CONTACT logo, NOTE This product version does not include a locking actuator.

Product description

Infrastructure charging socket for charging electric vehicles (EV) with alternating current (AC), compatible with type 2 Infrastructure Plugs, for installation at charging stations for E-Mobility (EVSE)

Your advantages

- Protected against overheating with precise temperature measurement
- Flexible mounting and easy maintenance with plug-in cables
- Available with your logo on request - for consistent branding of your charging station
- Waterproof and dirtproof due to fully molded contacts
- Developed and produced in accordance with the IATF 16949 automotive standard and ISO 9001
- Uniform, space-saving installation space

Commercial data

Item number	1286399
Packing unit	1 pc
Minimum order quantity	1 pc
Sales key	EM01
Product key	XWBADC
GTIN	4063151511371
Weight per piece (including packing)	340 g
Weight per piece (excluding packing)	338 g
Customs tariff number	85366990
Country of origin	DE

Set consists of

EV-T2M3SO-CAP - Protective cap

1202424

https://www.phoenixcontact.com/us/products/1202424



CHARX connect modular, Protective cap, circular, Accessories, for strain relief and touch protection, Type 2, IEC 62196-2

Technical data

Notes

General	NOTE This product version does not include a locking actuator.

Product properties

Product type	Infrastructure charging socket
Product family	CHARX connect modular
Application	for charging electric vehicles (EV) with alternating current (AC)
	compatible with infrastructure charging plugs
Design (Infrastructure charging socket)	square
Design (Protective cap)	circular
Type	Basic
Design	without locking actuator
Affixed logo	PHOENIX CONTACT logo
Charging standard	Type 2
Charging mode	Mode 3, Case B

Electrical properties

Type of signal transmission	Pulse width modulation
Note on the connection method	Connection via spade connector, separable and reconnectable
Type of charging current	AC 3-phase
Charging power rating	22 kW
Charging power	max. 26.6 kW
Charging current	max. 32 A

Power contact

Number	5 (L1, L2, L3, N, PE)
Rated voltage	480 V AC
Rated current	max. 32 A

Signal contact

Number	2 (CP, PP)
Rated voltage	30 V AC
Rated current	2 A

Dimensions

Infrastructure charging socket

Dimensional drawing	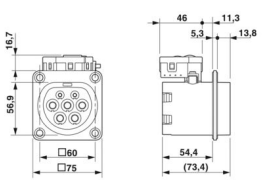

	Note: This product version does not have the illustrated locking actuator.
Width	75 mm
Height	91.71 mm
Depth	87.95 mm

Bore dimensions

Dimensional drawing	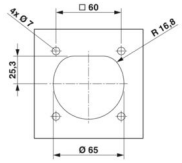
Width	60 mm
Height	60 mm

Protective cap

Width	64 mm
Height	57 mm
Depth	24 mm

Material specifications

Color (Housing)	black (9005)
Material (Housing)	Plastic
Material (Contact surface)	Silver

Cable/line

Cable type	without single-core wires
Single wire, cross section	6.00 mm²

Single-core wires for locking actuator

Cable length	0.5 m
Cable structure	4 x 0.5 mm²
Single wire, material	PVC
Single wire, color	BU/RD, BU/GN, BU/YE, BU/BN
External cable diameter	1.60 mm ±0.20 mm
Cable resistance	≤ 37.1 Ω/m

Mechanical properties

Mechanical data

Insertion/withdrawal cycles	> 10000
Insertion force	< 100 N
Withdrawal force	< 100 N

Environmental and real-life conditions

Ambient conditions

Degree of protection (Infrastructure charging socket)	IP44 (plugged in)
Degree of protection (Protective cover)	IP54 (see accessories)
Ambient temperature (operation)	-30 °C ... 50 °C
Ambient temperature (storage/transport)	-40 °C ... 80 °C
Altitude	5000 m (above sea level)

Standards and regulations

Standards

Standards/regulations	IEC 62196-2

Mounting

Mounting type Infrastructure charging socket	Rear panel mounting (0 to 90 degree frontal inclination possible)
Mounting type Protective cover	Rear panel mounting (available separately)
Max. wall thickness	max. 50.00 mm (Rear panel mounting, normative maximum specification for infrastructure plug)
	max. 28.00 mm (Rear mounting, normative maximum specification for infrastructure plug when using protective cover 1405217)
Mounting hole diameter	7.00 mm (ø)
Fixing screws	M5 thread
Screws included in the scope of delivery	none

Drawings

Schematic diagram

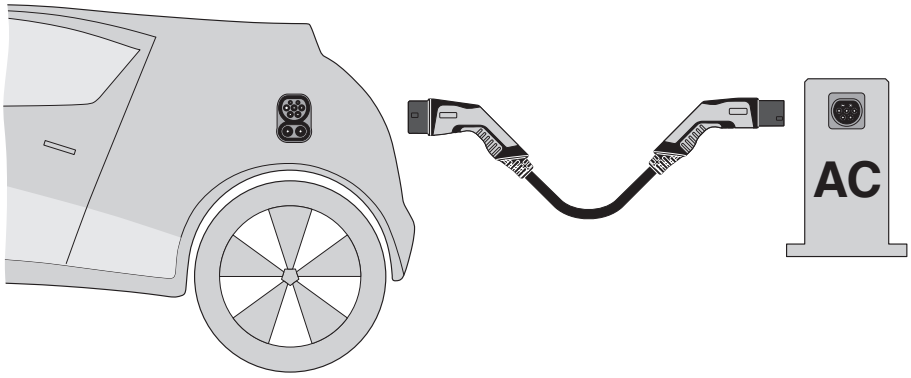

Operating instructions

Dimensional drawing

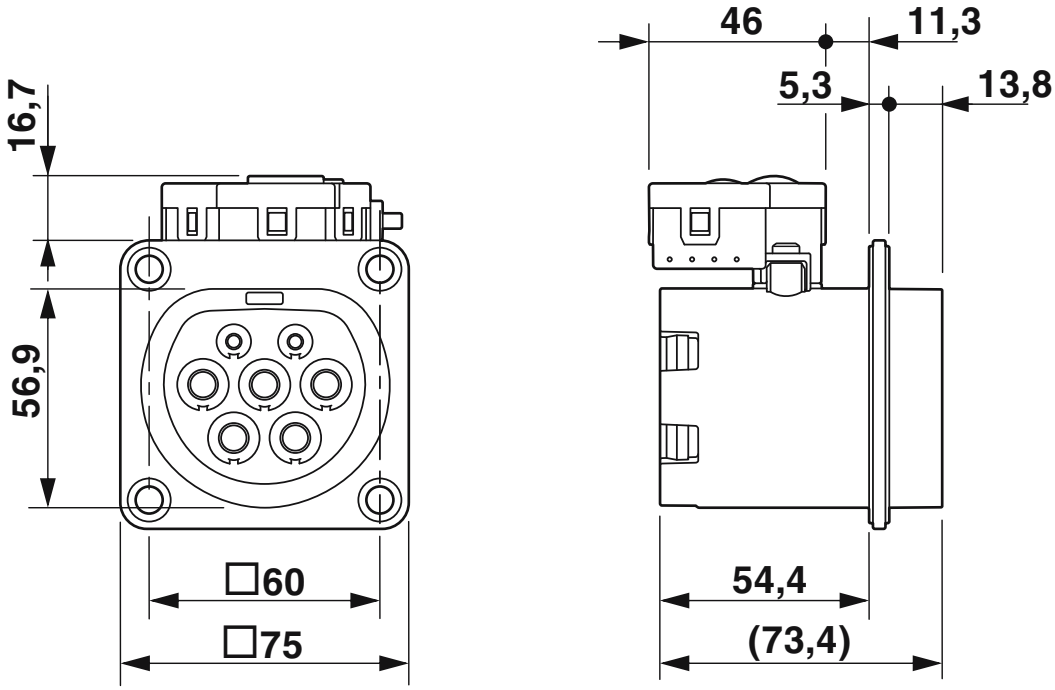

Note: This product version does not have the illustrated locking actuator.

Schematic diagram

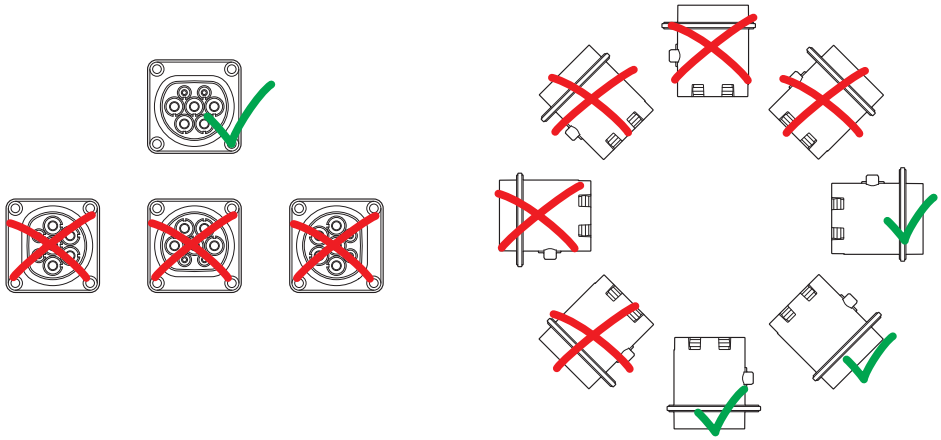

Installation positions

Dimensional drawing

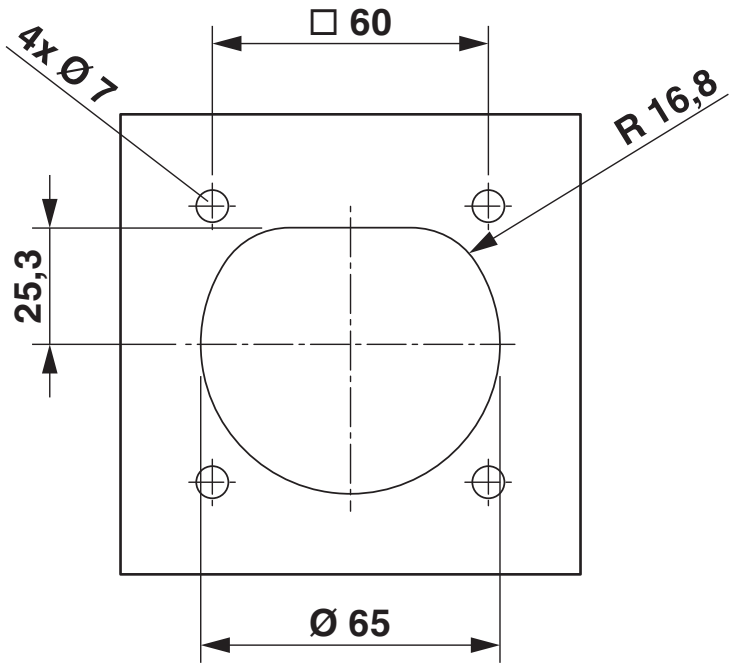

Connection diagram

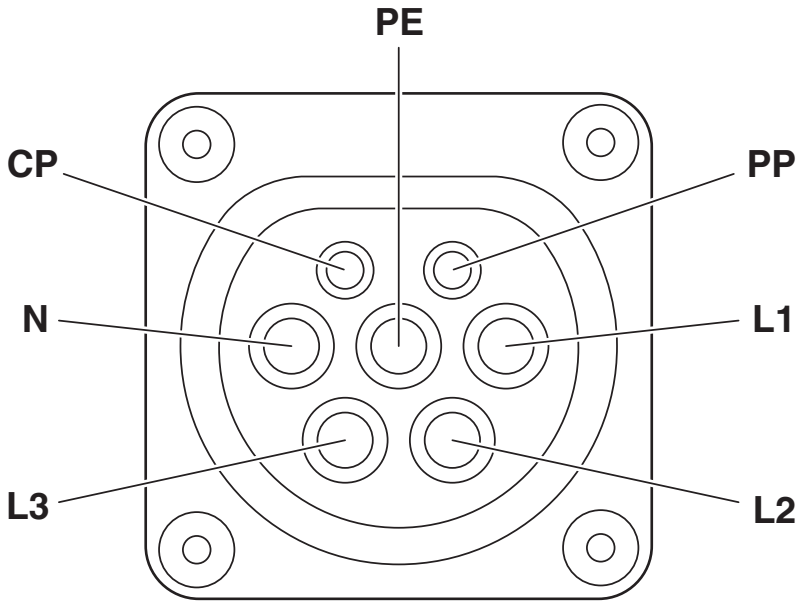

Pin assignment of infrastructure charging socket

Approvals

To download certificates, visit the product detail page: https://www.phoenixcontact.com/us/products/1286399

VDE Gutachten mit Fertigungsüberwachung
Approval ID: 40053862

Classifications

ECLASS

ECLASS-11.0	27144706
ECLASS-13.0	27144706
ECLASS-12.0	27144706

ETIM

ETIM 9.0	EC002898

UNSPSC

UNSPSC 21.0	39121800

Environmental product compliance

EU RoHS

Fulfills EU RoHS substance requirements	Yes
Exemption	6(c)

China RoHS

Environment friendly use period (EFUP)	EFUP-10
	An article-related China RoHS declaration table can be found in the download area for the respective article under "Manufacturer declaration". For all articles with EFUP-E, no China RoHS declaration table issued and required.

EU REACH SVHC

REACH candidate substance (CAS No.)	Lead(CAS: 7439-92-1)

Accessories

EV-LABEL-C-SO - Label

1315521

https://www.phoenixcontact.com/us/products/1315521



CHARX connect, Label, Accessories, for AC type 2 infrastructure charging socket and for AC type 2 infrastructure charging plug, DIN EN 17186

EV-T2SOC-B - Protective cover

1164293

https://www.phoenixcontact.com/us/products/1164293



CHARX connect modular, Protective cover, square, Accessories, Basic, with self-locking mechanism, for attaching to infrastructure charging sockets, Type 2, IEC 62196-2, Front mounting, M5 thread, Embossed PHOENIX CONTACT logo

EV-T2M3SOW-1AC32A-0,3M6,0E - Cable set for infrastructure charging socket

1164343

https://www.phoenixcontact.com/us/products/1164343



CHARX connect modular, Cable set for infrastructure charging socket, Accessories, with slip-on sleeve at one end, Only for connection to generation 2 infrastructure charging sockets from Phoenix Contact, Type 2, IEC 62196-2, 32 A / 250 V (AC), Single wires, length: 0.3 m, Plug-in mounting

EV-T2M3SOW-3AC20A-0,3M2,5E - Cable set for infrastructure charging socket

1164355

https://www.phoenixcontact.com/us/products/1164355



CHARX connect modular, Cable set for infrastructure charging socket, Accessories, with slip-on sleeve at one end, Only for connection to generation 2 infrastructure charging sockets from Phoenix Contact, Type 2, IEC 62196-2, 20 A / 480 V (AC), Single wires, length: 0.3 m, Plug-in mounting

EV-T2M3SOW-3AC32A-0,3M6,0E - Cable set for infrastructure charging socket

1164362

https://www.phoenixcontact.com/us/products/1164362



CHARX connect modular, Cable set for infrastructure charging socket, Accessories, with slip-on sleeve at one end, Only for connection to generation 2 infrastructure charging sockets from Phoenix Contact, Type 2, IEC 62196-2, 32 A / 480 V (AC), Single wires, length: 0.3 m, Plug-in mounting

EV-T2M3SOW-1AC32A-0,7M6,0E - Cable set for infrastructure charging socket

1164344

https://www.phoenixcontact.com/us/products/1164344



CHARX connect modular, Cable set for infrastructure charging socket, Accessories, with slip-on sleeve at one end, Only for connection to generation 2 infrastructure charging sockets from Phoenix Contact, Type 2, IEC 62196-2, 32 A / 250 V (AC), Single wires, length: 0.7 m, Plug-in mounting

EV-T2M3SOW-3AC20A-0,7M2,5E - Cable set for infrastructure charging socket

1164361

https://www.phoenixcontact.com/us/products/1164361



CHARX connect modular, Cable set for infrastructure charging socket, Accessories, with slip-on sleeve at one end, Only for connection to generation 2 infrastructure charging sockets from Phoenix Contact, Type 2, IEC 62196-2, 20 A / 480 V (AC), Single wires, length: 0.7 m, Plug-in mounting

EV-T2M3SOW-3AC32A-0,7M6,0E - Cable set for infrastructure charging socket

1164365

https://www.phoenixcontact.com/us/products/1164365



CHARX connect modular, Cable set for infrastructure charging socket, Accessories, with slip-on sleeve at one end, Only for connection to generation 2 infrastructure charging sockets from Phoenix Contact, Type 2, IEC 62196-2, 32 A / 480 V (AC), Single wires, length: 0.7 m, Plug-in mounting

EV-T2M3SO-CAP - Protective cap

1202424

https://www.phoenixcontact.com/us/products/1202424



CHARX connect modular, Protective cap, circular, Accessories, for strain relief and touch protection, Type 2, IEC 62196-2

EV-T2M3SO-CAP-REMOVER - Removal tool

1286836

https://www.phoenixcontact.com/us/products/1286836



CHARX connect modular, Removal tool, Accessories, for removing the protective cap for strain relief and touch protection, which is mounted on the back of the infrastructure charging sockets, Type 2

CHARX SEC-1000 - AC charging controller

1139034

https://www.phoenixcontact.com/us/products/1139034



CHARX control modular, AC charging controller, IEC 61851-1, operating mode: Stand-Alone, Client, interface: CHARX control modular system bus, Connectable peripheral devices: Energy meter, RFID, DC residual current detection, DIN rail mounting

CHARX SEC-3000 - AC charging controller

1139022

https://www.phoenixcontact.com/us/products/1139022



CHARX control modular, AC charging controller, with Embedded Linux system, IEC 61851-1, operating mode: Stand-Alone, Client, Server, interface: Ethernet (2 x), CHARX control modular system bus, MICRO-USB type C, communication protocol: OCPP 1.6J, Modbus/TCP, MQTT, Connectable peripheral devices: Energy meter, RFID, DC residual current detection, DIN rail mounting

CHARX SEC-3050 - AC charging controller

1139018

https://www.phoenixcontact.com/us/products/1139018



CHARX control modular, AC charging controller, with Embedded Linux system, IEC 61851-1, ISO 15118, operating mode: Stand-Alone, Client, Server, interface: Ethernet (2x), CHARX control modular system bus, MICRO-USB type C, communication protocol: OCPP 1.6J, Modbus/TCP, MQTT, Connectable peripheral devices: Energy meter, RFID, DC residual current detection, DIN rail mounting

CHARX SEC-3100 - AC charging controller

1139012

https://www.phoenixcontact.com/us/products/1139012



CHARX control modular, AC charging controller, with Embedded Linux system, IEC 61851-1, operating mode: Stand-Alone, Client, Server, interface: Ethernet (2 x), Cellular communication (4G/2G), CHARX control modular system bus, MICRO-USB type C, communication protocol: OCPP 1.6J, Modbus/TCP, MQTT, Connectable peripheral devices: Energy meter, RFID, DC residual current detection, DIN rail mounting

CHARX SEC-3150 - AC charging controller

1138965

https://www.phoenixcontact.com/us/products/1138965



CHARX control modular, AC charging controller, with Embedded Linux system, IEC 61851-1, ISO 15118, operating mode: Stand-Alone, Client, Server, interface: Ethernet (2x), Cellular communication (4G/2G), CHARX control modular system bus, MICRO-USB type C, communication protocol: OCPP 1.6J, Modbus/TCP, MQTT, Connectable peripheral devices: Energy meter, RFID, DC residual current detection, DIN rail mounting

EM-CP-PP-ETH - AC charging controller

2902802

https://www.phoenixcontact.com/us/products/2902802



EV charge control is used to charge electrical vehicles on the 3-phase AC mains power supply according to IEC 61851-1 Mode 3. All necessary control functions are integrated. Additional functions are available for various charging applications.

VAL-EV-T1/T2 264/12.5/3+1 - Lightning/surge arrester type 1/2

1180149

https://www.phoenixcontact.com/us/products/1180149



CHARX protect advanced: Plug-in lightning surge/surge protective device, in accordance with Type 1/2 / Class I/II, for 3-phase power supply networks with separate N and PE (5-conductor system: L1, L2, L3, N, PE). Specifically designed for use in e-mobility.

VAL-EV-T1/T2 264/12.5/3+1-R - Lightning/surge arrester type 1/2

1180150

https://www.phoenixcontact.com/us/products/1180150



CHARX protect advanced: Plug-in lightning surge/surge protective device, in accordance with Type 1/2 / Class I/II, for 3-phase power supply networks with separate N and PE (5-conductor system: L1, L2, L3, N, PE), with remote indication contact. Specifically designed for use in e-mobility.

VAL-EV-T2 280/3+1 - Type 2 surge arrester

1180144

https://www.phoenixcontact.com/us/products/1180144



CHARX protect basic: Plug-in surge protective device, in accordance with Type 2/Class II, for 3-phase power supply networks with separate N and PE (5-conductor system: L1, L2, L3, N, PE). Specifically designed for use in e-mobility.

VAL-EV-T2 280/3+1-R - Type 2 surge arrester

1180145

https://www.phoenixcontact.com/us/products/1180145



CHARX protect basic: Plug-in surge protective device, in accordance with Type 2/Class II, for 3-phase power supply networks with separate N and PE (5-conductor system: L1, L2, L3, N, PE), with remote indication contact. Specifically designed for use in e-mobility.

Phoenix Contact 2024 © - all rights reserved
https://www.phoenixcontact.com

Phoenix Contact USA
586 Fulling Mill Road
Middletown, PA 17057, United States
(+717) 944-1300
info@phoenixcon.com