# VAL-MS 600DC-PV-ST - Type 2 surge protection plug

2800623

https://www.phoenixcontact.com/us/products/2800623

Please be informed that the data shown in this PDF document is generated from our online catalog. Please find the complete data in the user documentation. Our general terms of use for downloads are valid.



Replacement plug for PV arrester combinations from the VAL-MS 600DC-PV-... product range

## Commercial data

| | |
|---|---|
| Item number | 2800623 |
| Packing unit | 1 pc |
| Minimum order quantity | 1 pc |
| Sales key | CL01 |
| Product key | CL1324 |
| Catalog page | Page 73 (C-4-2019) |
| GTIN | 4046356615105 |
| Weight per piece (including packing) | 65.2 g |
| Weight per piece (excluding packing) | 46.11 g |
| Customs tariff number | 85363010 |
| Country of origin | DE |

## Technical data

### Product properties

| | |
|---|---|
| Product type | Replacement plug |
| Product family | VALVETRAB MS |
| IEC test classification | PV II |
| | PV T2 |
| EN type | T2 |
| IEC power supply system | DC |
| Type | Male |
| Number of positions | 1 |
| Installation location | Interior |
| Installation location of the disconnect device | Internal |
| Accessibility | Accessible |
| Connection configuration | Y configuration |
| SPD failure behavior | OCFM (Open-Circuit Failure Mode) |
| Surge protection fault message | optical |

Insulation characteristics

| | |
|---|---|
| Overvoltage category | III |
| Pollution degree | 2 |

### Connection data

| | |
|---|---|
| Connection method | pluggable |

### Dimensions

| | |
|---|---|
| Dimensional drawing | 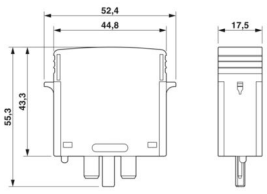 |
| Width | 17.5 mm |
| Height | 52.4 mm |
| Depth | 55.3 mm |
| Horizontal pitch | 1 Div. |

### Material specifications

| | |
|---|---|
| Color | black (RAL 9005) |
| | black (RAL 9005) |
| Flammability rating according to UL 94 | V-0 |
| CTI value of material | 600 |
| Insulating material | PA 6.6-FR |
| Material group | I |

| | |
|---|---|
| Housing material | PA 6.6-FR |

## Protective circuit

| | |
|---|---|
| Standby power consumption $P_C$ | ≤ 25.00 mVA |
| Nominal discharge current $I_n$ (8/20) µs | 15 kA |
| Maximum discharge current $I_{max}$ (8/20) µs | 40 kA |
| Voltage protection level $U_p$ | ≤ 1.4 kV |
| Residual voltage $U_{res}$ | ≤ 1.4 kV (at $I_n$) |
| | ≤ 1.1 kV (at 5 kA) |
| | ≤ 1.3 kV (at 10 kA) |
| | ≤ 1.5 kV (at 20 kA) |
| | ≤ 1.8 kV (at 30 kA) |
| | ≤ 2 kV (at 40 kA) |
| Response time $t_A$ | ≤ 25 ns |

PV protective circuit

| | |
|---|---|
| Connection configuration | Y configuration |
| SPD failure behavior | OCFM (Open-Circuit Failure Mode) |

Protective circuit DC voltage side (DC)

| | |
|---|---|
| Open circuit voltage $U_{OCSTC}$ | ≤ 330 V DC |
| Maximum discharge current $I_{max}$ (8/20) µs | 40 kA |
| Response time $t_A$ | ≤ 25 ns |
| Insulation resistance $R_{iso}$ | > 5 GΩ (at 500 V DC) |
| Nominal discharge current $I_n$ (8/20) µs | 15 kA |
| Continuous operating current $I_{CPV}$ | 20 µA |
| Maximum continuous operating voltage $U_{CPV}$ | 400 V DC |
| Short-circuit current rating $I_{SCPV}$ | 2000 A |
| Residual voltage $U_{res}$ | ≤ 1.4 kV (at $I_n$) |
| | ≤ 1.1 kV (at 5 kA) |
| | ≤ 1.3 kV (at 10 kA) |
| | ≤ 1.5 kV (at 20 kA) |
| | ≤ 1.8 kV (at 30 kA) |
| | ≤ 2 kV (at 40 kA) |
| Voltage protection level $U_p$ | ≤ 1.4 kV |
| Standby power consumption $P_C$ | ≤ 25.00 mVA |

## Environmental and real-life conditions

Ambient conditions

| | |
|---|---|
| Degree of protection | IP20 |
| Ambient temperature (operation) | -40 °C ... 80 °C |
| Ambient temperature (storage/transport) | -40 °C ... 80 °C |
| Altitude | ≤ 2000 m (amsl) |
| Permissible humidity (operation) | 5 % ... 95 % |
| Shock (operation) | 60g (Half-sine / 11 ms / 3x ±X, ±Y, ±Z) |

| | |
|---|---|
| Vibration (operation) | 7.5g (5-500 Hz/2.5 h/XYZ) |

## Approvals

UL specifications

| | |
|---|---|
| Maximum continuous operating voltage MCOV | 800 V DC |
| Short-circuit current rating (SCCR) | 50 kA |
| Voltage protection rating VPR | 2 kV |
| Nominal discharge current $I_n$ | 20 kA |
| Mode of protection | (L+) - (L-) |
| | (L+) - G |
| | (L-) - G |
| Nominal voltage | 800 V DC |
| Power distribution system | DC PV |
| SPD Type | 1CA |

## Standards and regulations

| | |
|---|---|
| Standards/specifications | EN 61643-31 |
| Note | 2019 |
| Standards/specifications | IEC 61643-31 |
| Note | 2018 |

## Mounting

| | |
|---|---|
| Mounting type | on base element |

## Drawings

Circuit diagram



Dimensional drawing

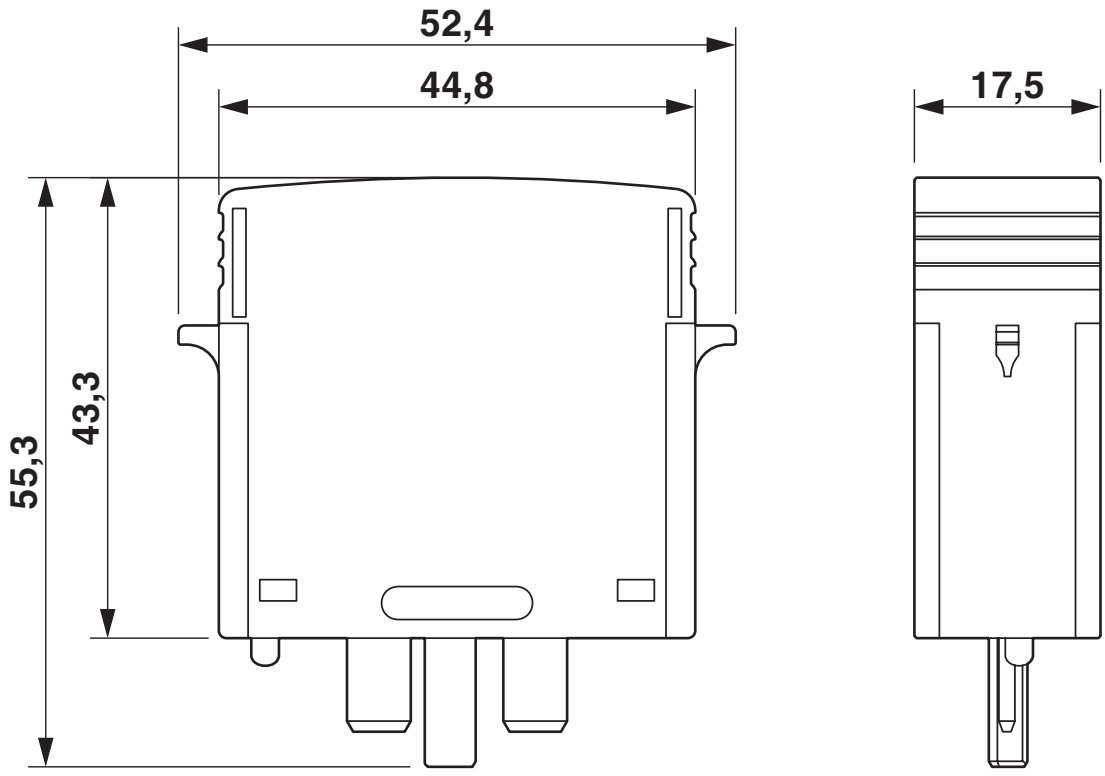

## Approvals

To download certificates, visit the product detail page: https://www.phoenixcontact.com/us/products/2800623

**cUL Recognized**
Approval ID: FILE E 330181

**UL Recognized**
Approval ID: FILE E 330181

**EAC**
Approval ID: RU C-DE.*09.B.00169

**KEMA-KEUR**
Approval ID: 71-123544 REV.2

**IECEE CB Scheme**
Approval ID: NL-81006/A1

**CCA**
Approval ID: NTR-NL 7937

**UAE-RoHS**
Approval ID: 22-09-51251

**cULus Recognized**

## Classifications

### ECLASS

| | |
|---|---|
| ECLASS-11.0 | 27130890 |
| ECLASS-13.0 | 27171492 |

### ETIM

| | |
|---|---|
| ETIM 9.0 | EC002496 |

### UNSPSC

| | |
|---|---|
| UNSPSC 21.0 | 39121620 |

## Environmental product compliance

EU RoHS

| | |
|---|---|
| Fulfills EU RoHS substance requirements | Yes, No exemptions |

China RoHS

| | |
|---|---|
| Environment friendly use period (EFUP) | EFUP-E |
| | No hazardous substances above the limits |

EU REACH SVHC

| | |
|---|---|
| REACH candidate substance (CAS No.) | No substance above 0.1 wt% |

## Accessories

### ZBN 18 CUS - Zack marker strip

0825059

https://www.phoenixcontact.com/us/products/0825059



Zack marker strip, can be ordered: Strip, white, labeled according to customer specifications, mounting type: snap into tall marker groove, for terminal block width: 18 mm, lettering field size: 18 x 5 mm, Number of individual labels: 5

### ZBN 18,LGS:ERDE - Marker for terminal blocks

2749589

https://www.phoenixcontact.com/us/products/2749589



Marker for terminal blocks, Strip, white, labeled, horizontal: Grounding symbol, mounting type: snapped, for terminal block width: 18 mm, lettering field size: 18 x 5 mm, Number of individual labels: 5

## ZBN 18,LGS:L1-N,ERDE - Marker for terminal blocks

2749576

https://www.phoenixcontact.com/us/products/2749576




Marker for terminal blocks, Strip, white, labeled, horizontal: L1, L2, L3, N, GND, mounting type: snapped, for terminal block width: 18 mm, lettering field size: 18 x 5 mm, Number of individual labels: 5

## ZBN 18:UNBEDRUCKT - Zack marker strip

2809128

https://www.phoenixcontact.com/us/products/2809128



Zack marker strip, Strip, white, unlabeled, can be labeled with: CMS-P1-PLOTTER, PLOTMARK, mounting type: snapped, for terminal block width: 18 mm, lettering field size: 18 x 5 mm, Number of individual labels: 5

## B-STIFT - Marker pen

1051993

https://www.phoenixcontact.com/us/products/1051993



Marker pen, for manual labeling of unprinted Zack strips, smear-proof and waterproof, line thickness 0.5 mm


Phoenix Contact 2024 © - all rights reserved
https://www.phoenixcontact.com



Phoenix Contact USA
586 Fulling Mill Road
Middletown, PA 17057, United States
(+717) 944-1300
info@phoenixcon.com