# SERIES: SJ-250X-SMT | DESCRIPTION: AUDIO JACK

## FEATURES

- right angle
- low profile design
- reflow solder compatible
- surface mount

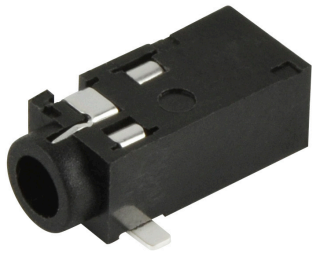

RoHS

## PART NUMBER KEY

SJ - 250 X X - SMT - TR

| Base Number | # Conductors: | Switch Options: | Package Style: | Packaging: |
|---|---|---|---|---|
| | 3 = 3<br>4 = 4 | A* = no switch | SMT = surface mount | TR = Tape & Reel |

Notes: *Discontinued model SJ-2503A-SMT-TR

## SPECIFICATIONS

| parameter | conditions/description | min | typ | max | units |
|---|---|---|---|---|---|
| rated input voltage | | | 12 | | Vdc |
| rated input current | | | | 1 | A |
| contact resistance[1] | between terminal and mating plug<br>between terminal in a closed circuit | | | 50<br>30 | mΩ<br>mΩ |
| insulation resistance | at 500 Vdc | 100 | | | MΩ |
| voltage withstand | for 1 minute | | | 500 | Vac |
| insertion/withdrawal force | | 0.3 | | 3 | kg |
| operating temperature | | -25 | | 85 | °C |
| life | at a rate of 24 cycles/minute | | 5,000 | | cycles |
| flammability rating | UL94V-0 | | | | |
| RoHS | yes | | | | |

Note:
1. When measured at a current of less than 100 mA/1 kHz
2. All specifications measured at 10~35°C, humidity at 45~85%, under standard atmospheric pressure, unless otherwise noted.

## MECHANICAL DRAWING

units: mm
tolerance:
X.X ±0.2 mm
X.XX ±0.10 mm
X.XXX ±0.050 mm
PCB: ±0.05 mm

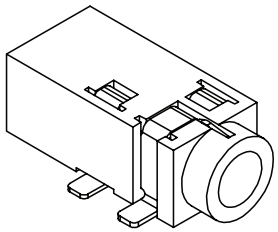

| | MATERIAL | PLATING |
|---|---|---|
| terminal 1 | copper alloy | silver |
| terminal 2 | copper alloy | silver |
| terminal 3 | copper alloy | silver |
| terminal 4 | copper alloy | silver |
| plastic | PA10T | |

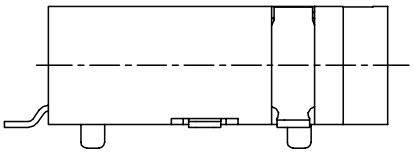

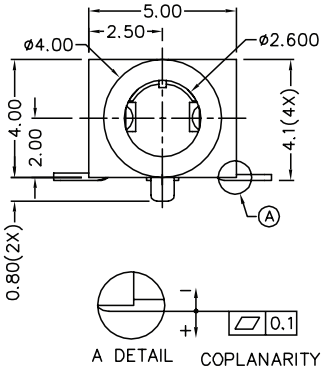


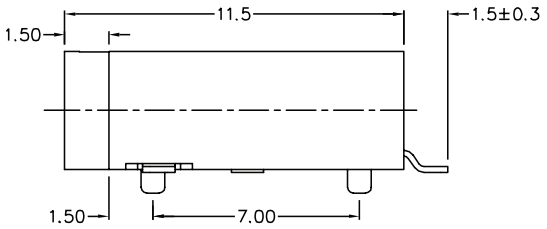


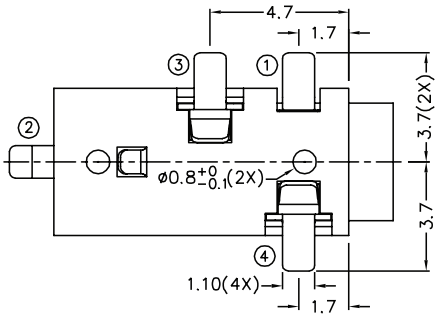


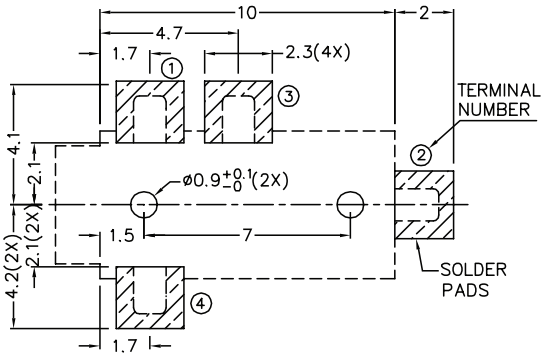


Recommended PCB Layout
Top View

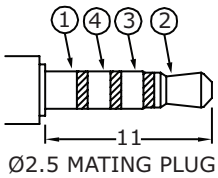


Ø2.5 MATING PLUG

| Model No. | SJ-2503A-SMT | SJ-2504A-SMT |
|---|---|---|
| Schematic | 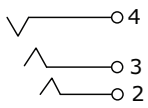 | 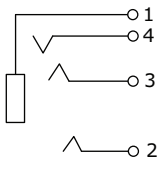 |
| PIN | | |
| 1 | NP | sleeve |
| 2 | tip | tip |
| 3 | ring 1 | ring 1 |
| 4 | ring 2 | ring 2 |

## SOLDERABILITY

| parameter | conditions/description | min | typ | max | units |
|---|---|---|---|---|---|
| reel storage | at relative humidity <80% | | | 40 | °C |
| reflow soldering[1] | see reflow profile | 255 | 260 | 265 | °C |
| drying conditions[2] | parts in reel: bake at 40°C ±5°C for 72 hours<br>parts removed from reel: bake at 40°C ±5°C for 10 hours | | | | |

Note: 1. Must reflow solder within 72 hours from opening vacuum packaging at a temperature <30°C & relative humidity <60%.
2. When exceeding floor life by >72 hours.

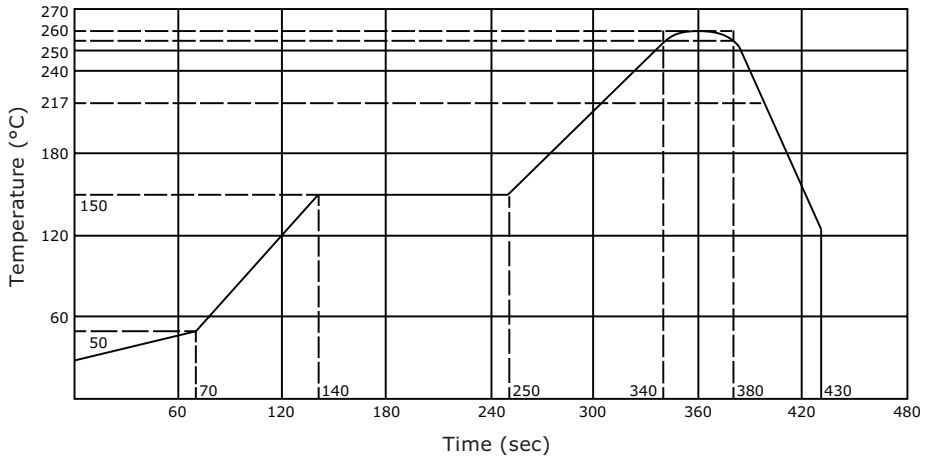


## PACKAGING

units: mm

Reel Size: Ø330 mm
Reel QTY: 1,000 pcs per reel

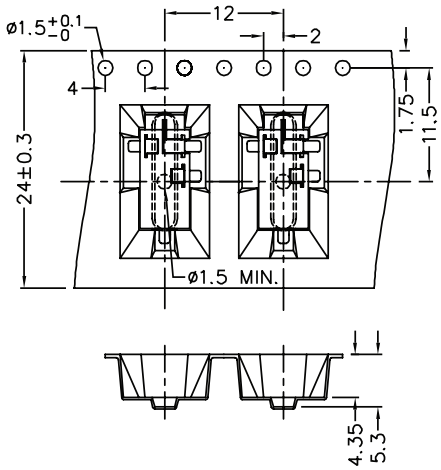


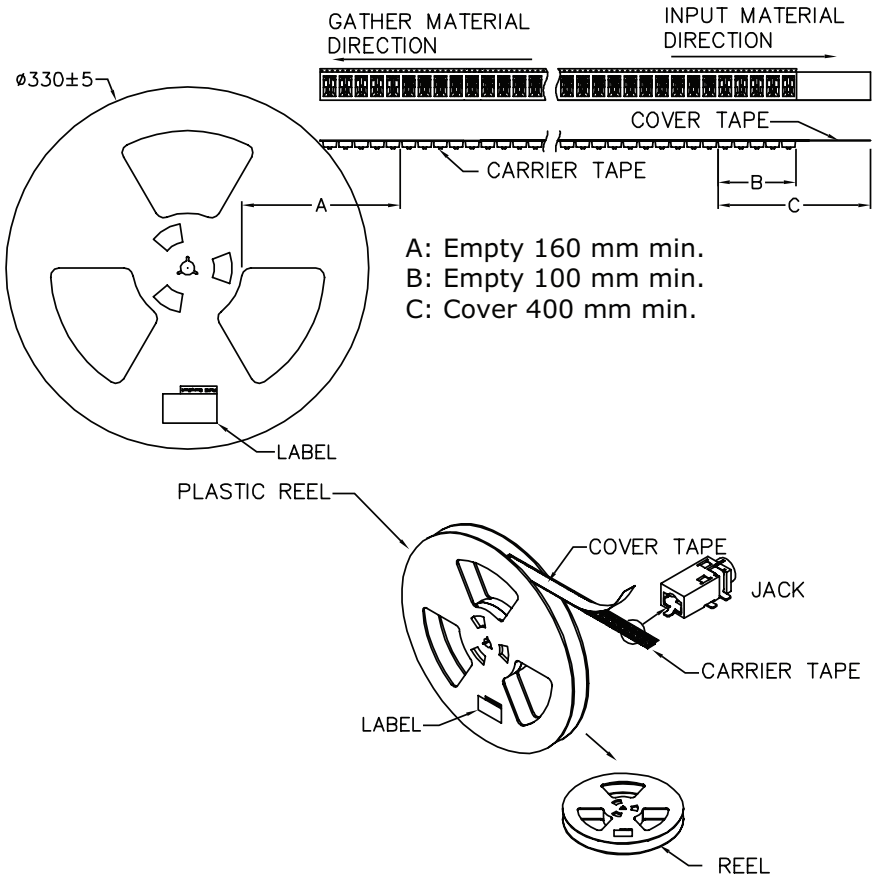

## REVISION HISTORY

| rev. | description | date |
|---|---|---|
| 1.0 | initial release | 12/01/2016 |
| 1.01 | added storage and drying conditions | 05/31/2017 |
| 1.04 | brand update | 10/04/2019 |
| 1.05 | discontinued model SJ-2503A-SMT-TR; logo, datasheet style update | 08/18/2022 |

The revision history provided is for informational purposes only and is believed to be accurate.

CUI Devices offers a one (1) year limited warranty. Complete warranty information is listed on our website.

CUI Devices reserves the right to make changes to the product at any time without notice. Information provided by CUI Devices is believed to be accurate and reliable. However, no responsibility is assumed by CUI Devices for its use, nor for any infringements of patents or other rights of third parties which may result from its use.

CUI Devices products are not authorized or warranted for use as critical components in equipment that requires an extremely high level of reliability. A critical component is any component of a life support device or system whose failure to perform can be reasonably expected to cause the failure of the life support device or system, or to affect its safety or effectiveness.

**cuidevices.com**