MIKROELEKTRONIKA D.O.O, Batajnički drum 23, 11000 Belgrade, Serbia
VAT: SR105917343 Registration No. 20490918
Phone: + 381 11 78 57 600 Fax: + 381 11 63 09 644 E-mail: office@mikroe.com
www.mikroe.com

LED Driver 15 Click



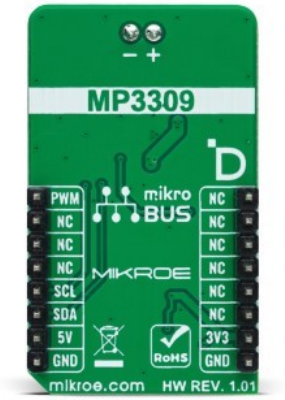

PID: MIKROE-5583

LED Driver 15 Click is a compact add-on board that simplifies the control of multiple LEDs. This board features the MP3309C, a fully integrated synchronous boost white LED driver with an I2C interface from Monolithic Power Systems. The MP3309C offers high efficiency, delivers up to 40mA of LED current, and operates from a voltage of mikroBUS™ power rails, supporting up to 8 white LEDs in series. It also features a programmable switching frequency to optimize efficiency, supports analog and PWM dimming, and has multiple built-in protection functions that protect the circuit during abnormalities. This Click board™ is suitable for backlight applications for various amusement products, LED status signalization, home automation projects, and other applications that need illumination with white light to conduct tasks like detection, recognition, and handling.

LED Driver 15 Click is supported by a mikroSDK compliant library, which includes functions that simplify software development. This Click board™ comes as a fully tested product, ready to be used on a system equipped with the mikroBUS™ socket.

How does it work?

LED Driver 15 Click is based on the MP3309C, a white LED step-up converter from Monolithic Power Systems that uses peak current mode to regulate the current through the LED string using an external low-side resistor. The MP3309C offers high efficiency and features a programmable switching frequency to optimize efficiency. It delivers up to 40mA of LED current supporting up to 8 white LEDs in series connected to the LED terminal. The MP3309C also has integrated protection circuitry to guard against thermal overstress and electrical damage featuring LED open protection, cycle-by-cycle current limit protection, under-voltage protection (UVP), and thermal shutdown protection.

Mikroe produces entire development toolchains for all major microcontroller architectures.
Committed to excellency, we are dedicated to helping engineers bring the project development up to speed and achieve outstanding results.
ISO 27001: 2013 certification of informational security management system.
ISO 14001: 2015 certification of environmental management system.
OHSAS 18001: 2008 certification of occupational health and safety management system.
ISO 9001: 2015 certification of quality management system (QMS).

MIKROELEKTRONIKA D.O.O, Batajnički drum 23, 11000 Belgrade, Serbia
VAT: SR105917343 Registration No. 20490918
Phone: + 381 11 78 57 600 Fax: + 381 11 63 09 644 E-mail: office@mikroe.com
www.mikroe.com

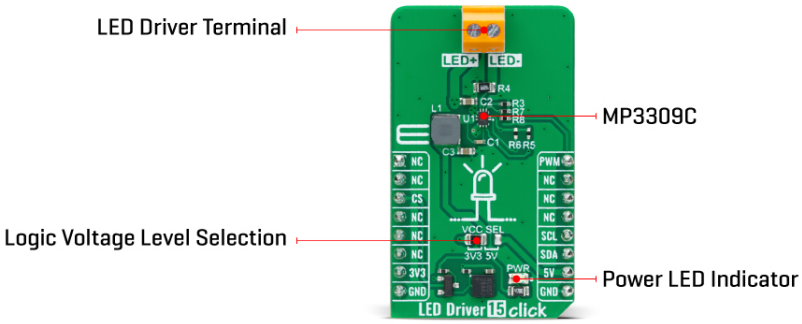

The MP3309C provides two dimming methods, PWM and analog dimming mode. It uses a PWM signal from the mikroBUS™ socket for PWM dimming. When the PWM signal is in a low logic state, the MP3309C stops switching and resumes Normal operation when the PWM signal is in a high logic state. Using a 100Hz to 2kHz PWM dimming frequency for most dimming ratio requests is recommended. The MP3309C set the LED current amplitude for analog dimming through the I2C interface. LED Driver 15 Click communicates with MCU using the standard I2C 2-Wire interface that supports Standard-Mode (100 kHz) and Fast-Mode (400 kHz) operation.

This Click board™ can operate with either 3.3V or 5V logic voltage levels selected via the VCC SEL jumper. This way, both 3.3V and 5V capable MCUs can use the communication lines properly. However, the Click board™ comes equipped with a library containing easy-to-use functions and an example code that can be used, as a reference, for further development.

Specifications

Type	LED Drivers
Applications	Can be used for various amusement products, LED status signalization, home automation projects, and other applications
On-board modules	MP3309C - synchronous boost white LED driver from Monolithic Power Systems
Key Features	WLED driver, programmable switching frequency, digitally set LED current, I2C interface, analog and PWM dimming, high efficiency and performance, low power consumption, protection features, and more
Interface	I2C,PWM
ClickID	Yes
Compatibility	mikroBUS™
Click board size	M (42.9 x 25.4 mm)
Input Voltage	3.3V or 5V

Pinout diagram

Mikroe produces entire development toolchains for all major microcontroller architectures.
Committed to excellency, we are dedicated to helping engineers bring the project development up to speed and achieve outstanding results.

ISO 27001: 2013 certification of informational security management system.
ISO 14001: 2015 certification of environmental management system.
OHSAS 18001: 2008 certification of occupational health and safety management system.

ISO 9001: 2015 certification of quality management system (QMS).

MIKROELEKTRONIKA D.O.O, Batajnički drum 23, 11000 Belgrade, Serbia
VAT: SR105917343 Registration No. 20490918
Phone: + 381 11 78 57 600 Fax: + 381 11 63 09 644 E-mail: office@mikroe.com
www.mikroe.com

This table shows how the pinout on LED Driver 15 Click corresponds to the pinout on the mikroBUS™ socket (the latter shown in the two middle columns).

Notes	Pin	mikroBUS				Pin	Notes
	NC	1	AN	PWM	16	**PWM**	PWM Signal
	NC	2	RST	INT	15	NC	
	NC	3	CS	RX	14	NC	
	NC	4	SCK	TX	13	NC	
	NC	5	MISO	SCL	12	**SCL**	I2C Clock
	NC	6	MOSI	SDA	11	**SDA**	I2C Data
Power Supply	**3.3V**	7	3.3V	5V	10	**5V**	Power Supply
Ground	**GND**	8	GND	GND	9	**GND**	Ground

Onboard settings and indicators

Label	Name	Default	Description
LD1	PWR	-	Power LED Indicator
JP1	VCC SEL	Left	Logic Level Voltage Selection 3V3/5V: Left position 3V3, Right position 5V

LED Driver 15 Click electrical specifications

Description	Min	Typ	Max	Unit
Supply Voltage	-	3.3	-	V
Output Current	-	-	40	mA

Software Support

We provide a library for the LED Driver 15 Click as well as a demo application (example), developed using Mikroe compilers. The demo can run on all the main Mikroe development boards.

Package can be downloaded/installed directly from NECTO Studio Package Manager (recommended), downloaded from our LibStock™ or found on Mikroe github account.

Library Description

This library contains API for LED Driver 15 Click driver.

Key functions

- leddriver15_set_i2c_dimming This function sets the LEDs dimming level in I2C mode.
- leddriver15_enable_device This function enables the device by setting the EN pin to high logic state.
- leddriver15_disable_device This function disables the device by setting the EN pin to low logic state.

Mikroe produces entire development toolchains for all major microcontroller architectures.
Committed to excellency, we are dedicated to helping engineers bring the project development up to speed and achieve outstanding results.

ISOQAR REGISTERED
UKAS MANAGEMENT SYSTEMS
ISO 27001: 2013 certification of informational security management system.
ISO 14001: 2015 certification of environmental management system.
OHSAS 18001: 2008 certification of occupational health and safety management system.
TÜV SÜD ISO 9001
ISO 9001: 2015 certification of quality management system (QMS).

MIKROELEKTRONIKA D.O.O, Batajnički drum 23, 11000 Belgrade, Serbia
VAT: SR105917343 Registration No. 20490918
Phone: + 381 11 78 57 600 Fax: + 381 11 63 09 644 E-mail: office@mikroe.com
www.mikroe.com

Example Description

This example demonstrates the use of LED Driver 15 Click board™ by changing the LEDs dimming level.

The complete application code, and ready-to-use projects can be installed directly from NECTO Studio Package Manager (recommended), downloaded from our LibStock™ or found on Mikroe github account.

Other Mikroe Libraries used in the example:

- MikroSDK.Board
- MikroSDK.Log
- Click.LEDDriver15

Additional notes and informations

Depending on the development board you are using, you may need USB UART click, USB UART 2 Click or RS232 Click to connect to your PC, for development systems with no UART to USB interface available on the board. A UART terminal is available in all Mikroe compilers.

mikroSDK

This Click board™ is supported with mikroSDK - Mikroe Software Development Kit, which needs to be downloaded from the LibStock and installed for the compiler you are using to ensure proper operation of mikroSDK compliant Click board™ demo applications.

For more information about mikroSDK, visit the official page.

Resources

mikroBUS™

mikroSDK

Click board™ Catalog

Click boards™

ClickID

Downloads

LED Driver 15 click example on Libstock

LED Driver 15 click 2D and 3D files

MP3309C datasheet

LED Driver 15 click schematic

Mikroe produces entire development toolchains for all major microcontroller architectures.
Committed to excellency, we are dedicated to helping engineers bring the project development up to speed and achieve outstanding results.

ISOQAR REGISTERED
UKAS MANAGEMENT SYSTEMS
ISO 27001: 2013 certification of informational security management system.
ISO 14001: 2015 certification of environmental management system.
OHSAS 18001: 2008 certification of occupational health and safety management system.

TÜV SÜD ISO 9001
ISO 9001: 2015 certification of quality management system (QMS).