Data sheet | Item number: 231-263/001-000

THT male header; 1.2 x 1.2 mm solder pin; straight; Pin spacing 7.5 mm; 3-pole; gray

www.wago.com/231-263/001-000

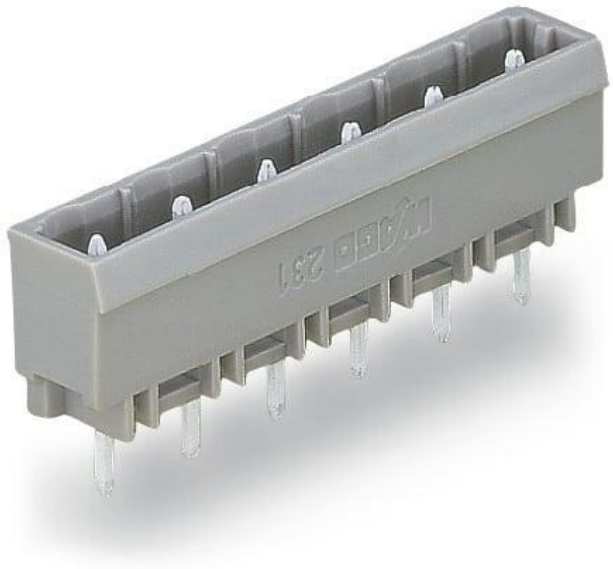

Picture differs from the item.

Color:

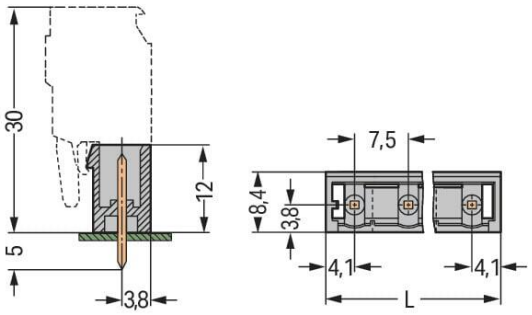

Dimensions in mm
L = (pole no. – 1) x pin spacing + 8.2 mm

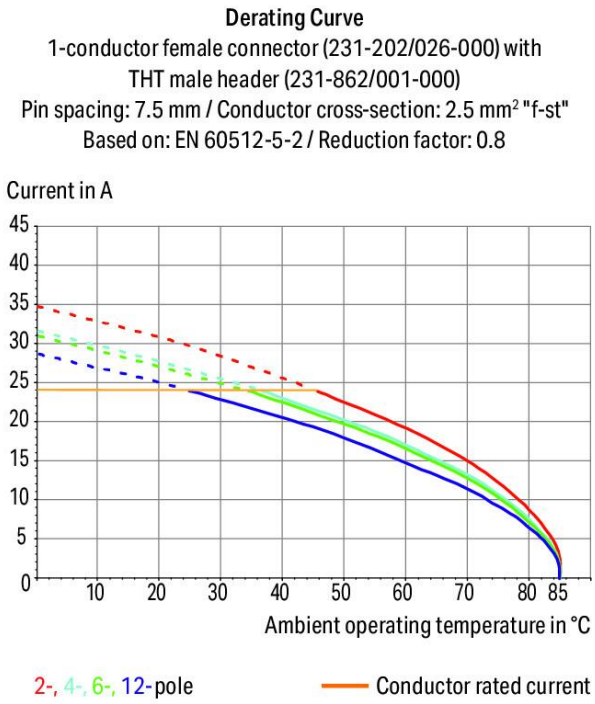

Subject to changes. Please also observe the further product documentation!

WAGO GmbH & Co. KG
Hansastr. 27
32423 Minden
Phone: +49571 887-0 | Fax: +49571 887-169
Email: info.de@wago.com | Web: www.wago.com

Do you have any questions about our products?
We are always happy to take your call at +49 (571) 887-44222.

Item description

- Horizontal or vertical PCB mounting via straight or angled solder pins
- 1.2 x 1.2 mm solder pins allow nominal current up to 16 A, enhancing stability of shorter headers
- With coding fingers

Data

Notes

Safety information	The *MCS – MULTI CONNECTION SYSTEM* includes connectors without breaking capacity in accordance with DIN EN 61984. When used as intended, these connectors must not be connected /disconnected when live or under load.When used as intended, these connectors must not be connected/disconnected when live or under load. The circuit design should ensure header pins, which can be touched, are not live when unmated.
Variants:	Other pole numbers 3.8 mm pin projection for male headers with straight solder pins Gold-plated or partially gold-plated contact surfaces Other versions (or variants) can be requested from WAGO Sales or configured at https://configurator.wago.com/.

Electrical data

Ratings per IEC/EN

Ratings per	IEC/EN 60664-1
Nominal voltage (III/3)	500 V
Rated impulse voltage (III/3)	6 kV
Rated voltage (III/2)	630 V
Rated impulse voltage (III/2)	6 kV
Nominal voltage (II/2)	1000 V
Rated surge voltage (II/2)	6 kV
Rated current	16 A
Legend (ratings)	(III / 2) ≙ Overvoltage category III / Pollution degree 2

Ratings per UL

Approvals per	UL 1059
Rated voltage UL (Use Group B)	300 V
Rated current UL (Use Group B)	15 A
Rated voltage UL (Use Group D)	300 V

Subject to changes. Please also observe the further product documentation!

WAGO GmbH & Co. KG
Hansastr. 27
32423 Minden
Phone: +49571 887-0 | Fax: +49571 887-169
Email: info.de@wago.com | Web: www.wago.com

Do you have any questions about our products?
We are always happy to take your call at +49 (571) 887-44222.

Rated current UL (Use Group D)	10 A

Ratings per UL 1977

Rated voltage (UL 1977)	600 V
Rated current UL 1977	15 A

Ratings per CSA

Approvals per	CSA
Rated voltage CSA (Use Group B)	300 V
Rated current CSA (Use Group B)	15 A
Rated voltage CSA (Use Group D)	300 V
Rated current CSA (Use Group D)	10 A

Connection data

Total number of potentials	3
Number of connection types	1
Number of levels	1

Connection 1

Pole number	3

Physical data

Pin spacing	7.5 mm / 0.295 inches
Width	23.2 mm / 0.913 inches
Height	17 mm / 0.669 inches
Height from the surface	12 mm / 0.472 inches
Depth	8.4 mm / 0.331 inches
Solder pin length	5 mm
Solder pin dimensions	1.2 x 1.2 mm
Drilled hole diameter with tolerance	$1.7\ ^{(+0.1)}$ mm

Mechanical data

Variable coding	Yes
Anti-rotation protection	Yes

Subject to changes. Please also observe the further product documentation!

WAGO GmbH & Co. KG
Hansastr. 27
32423 Minden
Phone: +49571 887-0 | Fax: +49571 887-169
Email: info.de@wago.com | Web: www.wago.com

Do you have any questions about our products?
We are always happy to take your call at +49 (571) 887-44222.

Plug-in connection

Contact type (pluggable connector)	Male connector/plug
Connector (connection type)	for PCB
Mismating protection	No
Plugging without loss of pin spacing	No
Mating direction to the PCB	90 °
Locking of plug-in connection	none

PCB contact

PCB contact	THT
Solder pin arrangement	over the entire male connector (in-line)
Number of solder pins per potential	1

Material data

Note (material data)	Information on material specifications can be found here
Color	gray
Material group	I
Insulation material	Polyamide (PA66)
Flammability class per UL94	V0
Contact material	Electrolytic copper (E_{Cu})
Contact plating	Tin
Fire load	0.055 MJ
Weight	1.4 g

Environmental requirements

Limit temperature range	-60 … +100 °C
Processing temperature	-35 … +60 °C

Commercial data

Product Group	3 (Multi Conn. System)
eCl@ss 10.0	27-44-04-02
eCl@ss 9.0	27-44-04-02
ETIM 8.0	EC002637
ETIM 7.0	EC002637

Subject to changes. Please also observe the further product documentation!

WAGO GmbH & Co. KG
Hansastr. 27
32423 Minden
Phone: +49571 887-0 | Fax: +49571 887-169
Email: info.de@wago.com | Web: www.wago.com

Do you have any questions about our products?
We are always happy to take your call at +49 (571) 887-44222.

ECCN	NO DATA
PU (SPU)	200 pcs
Packaging type	box
Country of origin	PL
GTIN	4044918929073
Customs tariff number	85366930000

Environmental Product Compliance

RoHS Compliance Status	Compliant,No Exemption

Approvals / Certificates

General approvals

Logo	Approval	Additional Approval Text	Certificate name
	CB DEKRA Certification B.V.	IEC 61984	NL-39756/A1
	CCC CQC	GB/T 13140.1	CQC03003003013
	CSA DEKRA Certification B.V.	C22.2	1466354
	KEMA/KEUR DEKRA Certification B.V.	EN 61984	71-121453
	UR Underwriters Laboratories Inc.	UL 1059	E45172
	UR Underwriters Laboratories Inc.	UL 1977	E 45171

Declarations of conformity and manufacturer's declarations

Logo	Approval	Additional Approval Text	Certificate name
	Railway WAGO GmbH & Co. KG	-	Railway Ready

Subject to changes. Please also observe the further product documentation!

WAGO GmbH & Co. KG
Hansastr. 27
32423 Minden
Phone: +49571 887-0 | Fax: +49571 887-169
Email: info.de@wago.com | Web: www.wago.com

Do you have any questions about our products?
We are always happy to take your call at +49 (571) 887-44222.

Approvals for marine applications

Logo	Approval	Additional Approval Text	Certificate name
	ABS American Bureau of Shipping	-	19-HG1869876-PDA
	BV Bureau Veritas S.A.	IEC 60998	11915/D0 BV
	DNV DNV GL SE	-	TAE000016Z

Counterpart

Item no.231-203/026-000
1-conductor female connector; CAGE CLAMP®; 2.5 mm²; Pin spacing 7.5 mm; 3-pole; 2,50 mm²; gray

www.wago.com/231-203/026-000

Optional accessories

Coding

Intermediate plate

Item no.: 231-500
Spacer; for formation of groups; light gray

www.wago.com/231-500

Coding

Item no.: 231-129
Coding key; snap-on type; light gray

www.wago.com/231-129

Downloads
Documentation

Additional Information

Subject to changes. Please also observe the further product documentation!

WAGO GmbH & Co. KG
Hansastr. 27
32423 Minden
Phone: +49571 887-0 | Fax: +49571 887-169
Email: info.de@wago.com | Web: www.wago.com

Do you have any questions about our products?
We are always happy to take your call at +49 (571) 887-44222.

Technical Section Technical explanations	2019 年4月3日	pdf 2.1 MB	Download

CAD/CAE-Data

CAD data

2D/3D Models 231-263/001-000	URL	Download

CAE data

EPLAN Data Portal 231-263/001-000	URL	Download
ZUKEN Portal 231-263/001-000	URL	Download
EPLAN Data Portal 231-263/001-000	URL	Download

PCB Design

Symbol and Footprint via Ultra Librarian 231-263/001-000	URL	Download

CAx data for your PCB design, consisting of "schematic symbols and PCB footprints", allow easy integration of the WAGO component into your development environment.

Supported formats:

- Accel EDA 14 & 15
- Altair
- Altium 6 to current version
- Autodesk Fusion 360
- Cadence Allegro
- DesignSpark
- Eagle Libraries
- KiCad
- Mentor Graphics
- BoardStation
- Mentor Graphics Design Architect
- Mentor Graphics Design
- Expedition 99 and 2000
- OrCAD 9.X PCB and Capture
- PADS PowerPCB 3, 3.5, 4.X, and 5.X
- PADS PowerPCB and PowerLogic 3.0

Subject to changes. Please also observe the further product documentation!

WAGO GmbH & Co. KG
Hansastr. 27
32423 Minden
Phone: +49571 887-0 | Fax: +49571 887-169
Email: info.de@wago.com | Web: www.wago.com

Do you have any questions about our products?
We are always happy to take your call at +49 (571) 887-44222.

- PCAD 2000, 2001, 2002, 2004, and 2006
- Pulsonix 8.5 or newer
- STL
- 3D STEP
- TARGET 3001!
- View Logic ViewDraw
- Quadcept
- Zuken CadStar 3 and 4
- Zuken CR-5000 and CR-8000
- Zuken eCADSTAR 2020 and 2021Zuken CR-5000 and CR-8000

PCB Component Libraries (EDA), PCB CAD Library Ultra Librarian

Symbol and Footprint via SamacSys 231-263/001-000 URL Download

CAx data for your PCB design, consisting of "schematic symbols and PCB footprints", allow easy integration of the WAGO component into your development environment.

Supported formats:

- 3D (stp)
- Altium
- CADSTAR
- Capture
- CircuitStudio
- CR-5000
- CR-8000
- DEHDL
- DesignSpark PCB
- DesignSpark PCB PRO
- DipTrace
- EAGLE
- Easy-PC
- EasyEDA
- eCADSTAR
- KiCad
- OrCAD_Allegro16
- PADS
- Proteus
- Pulsonix

Subject to changes. Please also observe the further product documentation!

WAGO GmbH & Co. KG
Hansastr. 27
32423 Minden
Phone: +49571 887-0 | Fax: +49571 887-169
Email: info.de@wago.com | Web: www.wago.com

Do you have any questions about our products?
We are always happy to take your call at +49 (571) 887-44222.

- Quadcept
- SOLIDWORKS PCB
- TARGET 3001!
- xDX Designer
- Xpedition

PCB Component Libraries (EDA), PCB CAD Library SamacSys Electronic Component Search Engine

Asset Administration Shell

Asset Administration Shell 231-263/001-000	URL	Download

Environmental Product Compliance

Compliance Search

Environmental Product Compliance 231-263/001-000 THT male header; 1.2 x 1.2 mm solder pin; straight; Pin spacing 7.5 mm; 3-pole; gray	URL	Download

Installation Notes

Coding

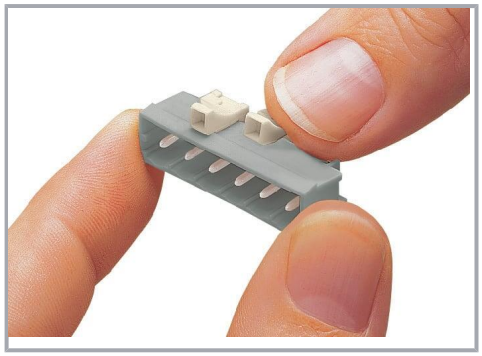

Coding a male header – fitting coding key(s).

Product family

MCS MIDI Classic
Show all products from the family

Subject to changes. Please also observe the further product documentation!

WAGO GmbH & Co. KG
Hansastr. 27
32423 Minden
Phone: +49571 887-0 | Fax: +49571 887-169
Email: info.de@wago.com | Web: www.wago.com

Do you have any questions about our products?
We are always happy to take your call at +49 (571) 887-44222.