Data sheet | Item number: 286-721

Optocoupler module; Nominal input voltage: 24 VDC; Output voltage range: 15 … 30 VDC; Limiting continuous current: 5 A; 3-wire connection/low-side switching; Red status indicator; Module width: 15 mm; gray

www.wago.com/286-721



Picture differs from the item.

Color:

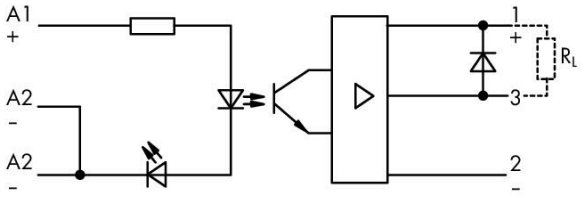

Subject to changes. Please also observe the further product documentation!

WAGO GmbH & Co. KG
Hansastr. 27
32423 Minden
Phone: +49571 887-0 | Fax: +49571 887-169
Email: info.de@wago.com | Web: www.wago.com

Do you have any questions about our products?
We are always happy to take your call at +49 (571) 887-44222.

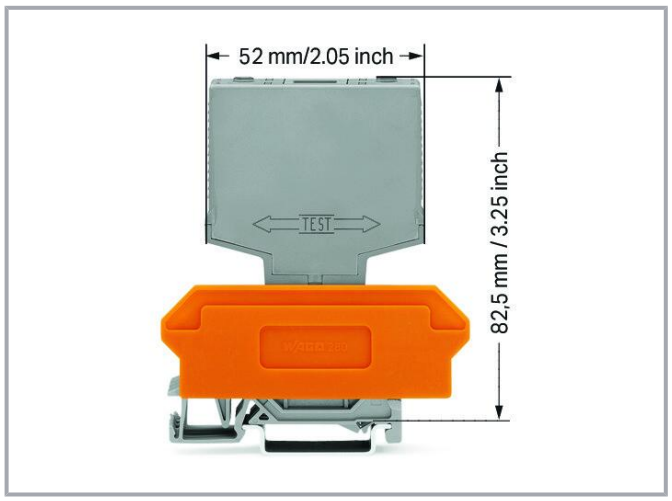

Data
Technical data

Control circuit

Nominal input voltage U_N	DC 24 V
Input voltage range (high level)	DC 15 … 30 V
Nominal input current at U_N	14 mA
Input current range	7.5 … 18 mA

Load circuit

Circuit type	3-wire connection Low-side switching
Limiting continuous current	5 A
Nominal output voltage	DC 24 V
Output voltage range	DC 15 … 40 V
Voltage drop at output (max.)	≤ DC 0.5 V
Voltage drop	≤ 0.5 VDC
Leakage current at rated voltage	≤ 2 µA
Turn-on time	≤ 20 µs
Turn-off time	≤ 80 µs
Switching frequency	≤ 1 kHz

Subject to changes. Please also observe the further product documentation!

WAGO GmbH & Co. KG
Hansastr. 27
32423 Minden
Phone: +49571 887-0 | Fax: +49571 887-169
Email: info.de@wago.com | Web: www.wago.com

Do you have any questions about our products?
We are always happy to take your call at +49 (571) 887-44222.

Signaling

Status indicator	Red LED

Safety and protection

Pollution degree	2
Dielectric strength (control/load circuit) (AC, 1 min)	2.5 kVrms
Protection type	IP20

Physical data

Width	15 mm / 0.591 inches
Height from upper-edge of DIN-rail	82.5 mm / 3.25 inches
Depth	52 mm / 2.047 inches

Mechanical data

Mounting type	Pluggable module for receptacle terminal blocks

Material data

Color	gray
Fire load	5.929 MJ
Weight	29.2 g

Environmental requirements

Ambient temperature (operation at U_N)	-25 … +40 °C
Ambient temperature (storage)	-25 … +40 °C
Processing temperature	-25 … +50 °C
Relative humidity	5 … 95 % (no condensation permissible)
Operating altitude (max.)	2000 m

Standards and specifications

Standards/specifications	EN 60664-1

Commercial data

Product Group	6 (INTERFACE ELECTRONIC)
eCl@ss 10.0	27-26-15-03

Subject to changes. Please also observe the further product documentation!

WAGO GmbH & Co. KG
Hansastr. 27
32423 Minden
Phone: +49571 887-0 | Fax: +49571 887-169
Email: info.de@wago.com | Web: www.wago.com

Do you have any questions about our products?
We are always happy to take your call at +49 (571) 887-44222.

eCl@ss 9.0	27-26-15-03
ETIM 8.0	EC001504
ETIM 7.0	EC001504
Recupel Type	
ECCN	NO DATA
PU (SPU)	15 (1) pcs
Packaging type	Box
Country of origin	DE
GTIN	4017332157735
Customs tariff number	85365005000

Environmental Product Compliance

CAS-No.	1303-86-2 1317-36-8 7439-92-1 79-94-7
REACH Candidate List Substance	2,2',6,6'-tetrabromo-4,4'-isopropylidenediphenol Diboron trioxide Lead Lead monoxide
RoHS Compliance Status	Compliant,With Exemption
RoHS Exemption	6(c) 7(a) 7(c)-I 7(c)-II
SCIP notification number (Austria)	0a938584-bc3f-4ca5-a92f-aed2344a0a26
SCIP notification number (Belgium)	98bb301d-154e-490a-992e-c2ecf03ea911
SCIP notification number (Bulgaria)	ce6e921f-6b20-4b1e-8ad1-7d1bd4e8bae6
SCIP notification number (Czech Republic)	fa6a524d-58c1-43fd-bdf6-4b26cb46b0ee
SCIP notification number (Denmark)	82b8c314-06a3-4e05-9ef3-8cd1d941caa2
SCIP notification number (Finland)	e023aa72-65b1-4809-9a0e-b31566b4d683
SCIP notification number (France)	10b9dcbc-5a2e-48f1-957b-cc4bf11548b9
SCIP notification number (Germany)	50e69804-47ed-4f8f-9bcf-8c731491a660
SCIP notification number (Hungary)	b9a282fb-dd0c-4623-8459-65fde7ac2910
SCIP notification number (Italy)	cdebb324-03b1-443b-9d34-638624684b2e
SCIP notification number (Netherlands)	fb9449cb-2b27-422d-b548-d52c447936b8
SCIP notification number (Poland)	3253dd11-36fa-4ceb-b09e-8e66674461d6
SCIP notification number (Romania)	f4e40732-ec6b-47f7-ad85-6bc7c9994c73
SCIP notification number (Sweden)	4fdbf1f5-0f88-4dd6-9fa7-6b1fe961a1ac

Subject to changes. Please also observe the further product documentation!

WAGO GmbH & Co. KG
Hansastr. 27
32423 Minden
Phone: +49571 887-0 | Fax: +49571 887-169
Email: info.de@wago.com | Web: www.wago.com

Do you have any questions about our products?
We are always happy to take your call at +49 (571) 887-44222.

Approvals / Certificates

General approvals

Logo	Approval	Additional Approval Text	Certificate name
	EAC GZO Almaty Standart	TP TC 020/2011	EAC CoC 03081

Optional accessories

Terminal blocks

Terminal block for pluggable modules



Item no.: 280-619
Terminal block for pluggable modules; 6-pole; with 2-conductor terminal blocks; with orange separator; for DIN-rail 35 x 15 and 35 x 7.5; 2.5 mm²; CAGE CLAMP®; 2,50 mm²; gray
www.wago.com/280-619



Item no.: 280-609
Terminal block for pluggable modules; 6-pole; with 4-conductor terminal blocks; with orange separator; for DIN-rail 35 x 15 and 35 x 7.5; 2.5 mm²; CAGE CLAMP®; 2,50 mm²; gray
www.wago.com/280-609



Item no.: 280-763
Terminal block for pluggable modules; 6-pole; with 4-conductor terminal blocks; with marker carrier; with orange separator; for DIN-rail 35 x 15 and 35 x 7.5; 2.5 mm²; CAGE CLAMP®; 2,50 mm²; gray
www.wago.com/280-763

Marking accessories

Marker



Item no.: 209-701
WSB marking card; as card; not stretchable; plain; snap-on type; white
www.wago.com/209-701

Downloads

Documentation

Bid Text

286-721 docx - Datei	2019 年2月20 日	docx 15.6 kB	Download
286-721 X81 - Datei	2019 年2月19 日	xml 3.8 kB	Download

Instruction Leaflet

		pdf 1.3 MB	Download

Subject to changes. Please also observe the further product documentation!

WAGO GmbH & Co. KG
Hansastr. 27
32423 Minden
Phone: +49571 887-0 | Fax: +49571 887-169
Email: info.de@wago.com | Web: www.wago.com

Do you have any questions about our products?
We are always happy to take your call at +49 (571) 887-44222.

Additional Information

Disposal and Recycling Electrical and electronic equipment, Batteries, Packaging	V 1.1.0 2022 年8月18 日	pdf 2.2 MB	Download

CAD/CAE-Data

CAE data

WSCAD Universe 286-721	URL	Download

Environmental Product Compliance

Compliance Search

Environmental Product Compliance 286-721 Optocoupler module; Nominal input voltage: 24 VDC; Output voltage range: 15 … 30 VDC; Limiting continuous current: 5 A; 3-wire connection/low-side switching; Red status indicator; Module width: 15 mm; gray	URL	Download

Installation Notes

Installation

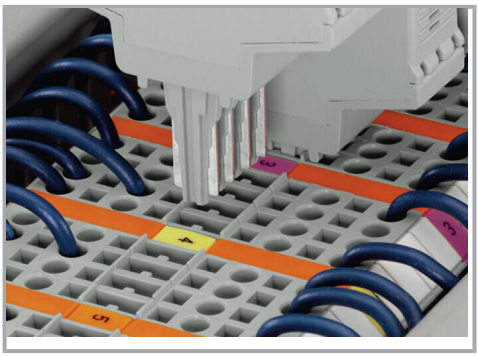

Coding ensures correct polarity.

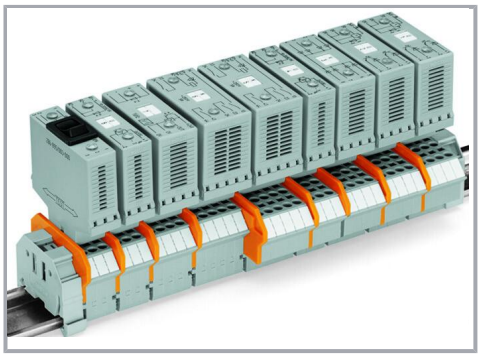

Pluggable electronic modules on 2- or 4-conductor carrier terminal blocks

Marking

WAGO GmbH & Co. KG
Hansastr. 27
32423 Minden
Phone: +49571 887-0 | Fax: +49571 887-169
Email: info.de@wago.com | Web: www.wago.com

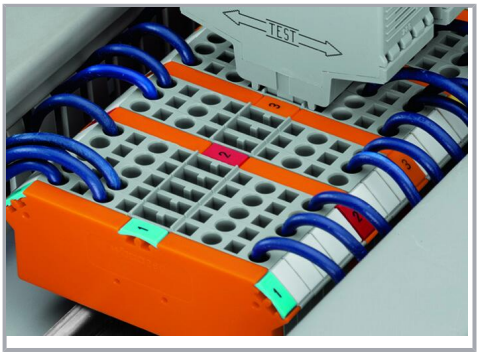

Marking via WMB Multi Marking System.

Testing



Function testing via touch-proof test slots

Subject to changes. Please also observe the further product documentation!

WAGO GmbH & Co. KG
Hansastr. 27
32423 Minden
Phone: +49571 887-0 | Fax: +49571 887-169
Email: info.de@wago.com | Web: www.wago.com

Do you have any questions about our products?
We are always happy to take your call at +49 (571) 887-44222.