PLC-RSC- 24DC/ 1ICT/ACT - Relay module

1078680

https://www.phoenixcontact.com/us/products/1078680

Please be informed that the data shown in this PDF document is generated from our online catalog. Please find the complete data in the user documentation. Our general terms of use for downloads are valid.



PLC-INTERFACE for high inrush currents, consisting of PLC-BSC.../1 IC/ACT basic terminal block with screw connection and pluggable miniature relay, for mounting on DIN rail NS 35/7.5, max. inrush current up to 800 A, 1 N/O contact, 24 V DC input voltage

Product description

The relay module is particularly suitable for switching strong capacitive loads, such as LED lights. The ballasts installed in the LED lights often have extremely high switch-on peaks which cause standard relay contacts to fuse. The leading tungsten pre-contact ensures that switch-on currents of up to 800 A can be switched safely.

Your advantages

- Direct connection of load return line thanks to actuator version
- Efficient connection to system cabling using V8 adapter
- Safe isolation between coil and contact side
- Max. inrush current of 800 A
- Functional plug-in bridges

Commercial data

Item number	1078680
Packing unit	10 pc
Minimum order quantity	10 pc
Sales key	C461
Product key	DK6236
GTIN	4055626794600
Weight per piece (including packing)	77.24 g
Weight per piece (excluding packing)	44.1 g
Customs tariff number	85364190
Country of origin	DE

Technical data

Notes

Notes on operation	Separating plate PLC-ATP must be installed for voltages larger than 250 V (L1, L2, L3) between identical terminal blocks in adjacent modules. Potential bridging is then carried out with FBST 8-PLC... or FBST 500....
Notes on operation	The PLC-ATP separating plate should be installed for safe isolation between adjacent modules
Assembly note	The PLC-ATP separating plate is required at the start and end of every PLC terminal strip.
Notes on operation	The system installer must ensure the touch protection of the product (at voltages > 25 V AC/60 V DC). The product is a built-in device without protection against direct contact.

Product properties

Product type	Relay Module
Product family	PLC-INTERFACE
Application	high inrush currents
Operating mode	100% operating factor
Mechanical service life	3x 10^7 cycles

Insulation characteristics: Standards/regulations

Insulation	Safe isolation, reinforced insulation
Overvoltage category	III
Pollution degree	3

Data management status

Date of last data management	21.03.2025

Electrical properties

Maximum power dissipation for nominal condition	0.43 W
Test voltage (Winding/contact)	4 kV AC (50 Hz, 1 min., winding/contact)

Standards/regulations

Rated insulation voltage	250 V AC
Rated surge voltage	6 kV

Input data

Coil side

Nominal input voltage U_N	24 V DC
Input voltage range	20.2 V DC ... 33.6 V DC (20 °C)
Nominal voltage (plugged-in electromechanical relay)	24 V DC
Drive and function	monostable
Drive (polarity)	polarized
Typical input current at U_N	18 mA

Typical response time	8 ms
Typical release time	10 ms
Protective circuit	Reverse polarity protection; Polarity protection diode
	Freewheeling diode; Freewheeling diode
Operating voltage display	Yellow LED

Output data

Switching

Contact switching type	1 N/O contact
Type of switch contact	Single contact
Note regarding the switch contact	With tungsten leading contact
Contact material	AgSnO
Note	Main contact silver tin oxide ($AgSnO_2$): lead contact tungsten
Maximum switching voltage	250 V AC/DC
Minimum switching voltage	12 V (100 mA)
Limiting continuous current	6 A
	10 A (the value is permissible if both connections 13, both connections 14 and both connections BB are bridged)
Maximum inrush current	165 A (20 ms)
	800 A (200 µs)
Min. switching current	100 mA (12 V)
Interrupting rating (ohmic load) max.	144 W (at 24 V DC)
	58 W (at 48 V DC)
	48 W (at 60 V DC)
	50 W (at 110 V DC)
	80 W (at 220 V DC)
	1500 VA (for 250 V AC)
Interrupting rating (ohmic load) max. bridged	240 W (for 24 V DC. The value is permissible if both connections 13, both connections 14 and both connections BB are bridged.)
	2500 VA (for 250 V AC. The value is permissible if both connections 13, both connections 14 and both connections BB are bridged.)
Switching capacity min.	1200 mW
Switching capacity	2 A (at 24 V, DC13)
	0.2 A (at 110 V, DC13)
	0.2 A (at 250 V, DC13)
	6 A (at 24 V, AC15)
	6 A (at 120 V, AC15)
	6 A (at 250 V, AC15)

Connection data

Connection method	Screw connection
Stripping length	8 mm
Screw thread	M3
Conductor cross-section rigid	0.14 mm² ... 2.5 mm²

Conductor cross-section flexible	0.14 mm² ... 2.5 mm²
	0.2 mm² ... 2.5 mm² (Single ferrule)
	2x 0.5 mm² ... 1.5 mm² (TWIN ferrule)
Conductor cross-section AWG	26 ... 14
Tightening torque	0.6 Nm ... 0.8 Nm

Dimensions

Width	14 mm
Height	80 mm
Depth	94 mm

Material specifications

Color	gray (RAL 7042)
Flammability rating according to UL 94 (Housing)	V0 (Housing)

Environmental and real-life conditions

Ambient conditions

Degree of protection (Relay)	RT II (Relay)
Degree of protection (Relay base)	IP20 (Relay base)
Degree of protection (Installation location)	≥ IP54 (Installation location)
Ambient temperature (operation)	-40 °C ... 60 °C
Ambient temperature (storage/transport)	-40 °C ... 85 °C
Altitude	≤ 2000 m

Approvals

CE

Certificate	CE-compliant

UKCA

Certificate	UKCA-compliant

Shipbuilding approval

Certificate	TAE0000196

Corrosive gas test

Identification	ISA-S71.04. G3 Harsh Group
	EN 60068-2-60

Shipbuilding data

Temperature	D
Humidity	A
Vibration	B/C
EMC	B
Enclosure	Required protection according to the Rules shall be provided upon installation on board

EMC data

Electromagnetic compatibility	Conformance with EMC directive
Low Voltage Directive	Conformance with Low Voltage Directive

Standards and regulations

Standards/regulations

Standards/regulations	IEC 60947-5-1

Mounting

Mounting type	DIN rail mounting
Assembly note	in rows with zero spacing
Mounting position	any

Drawings

Diagram

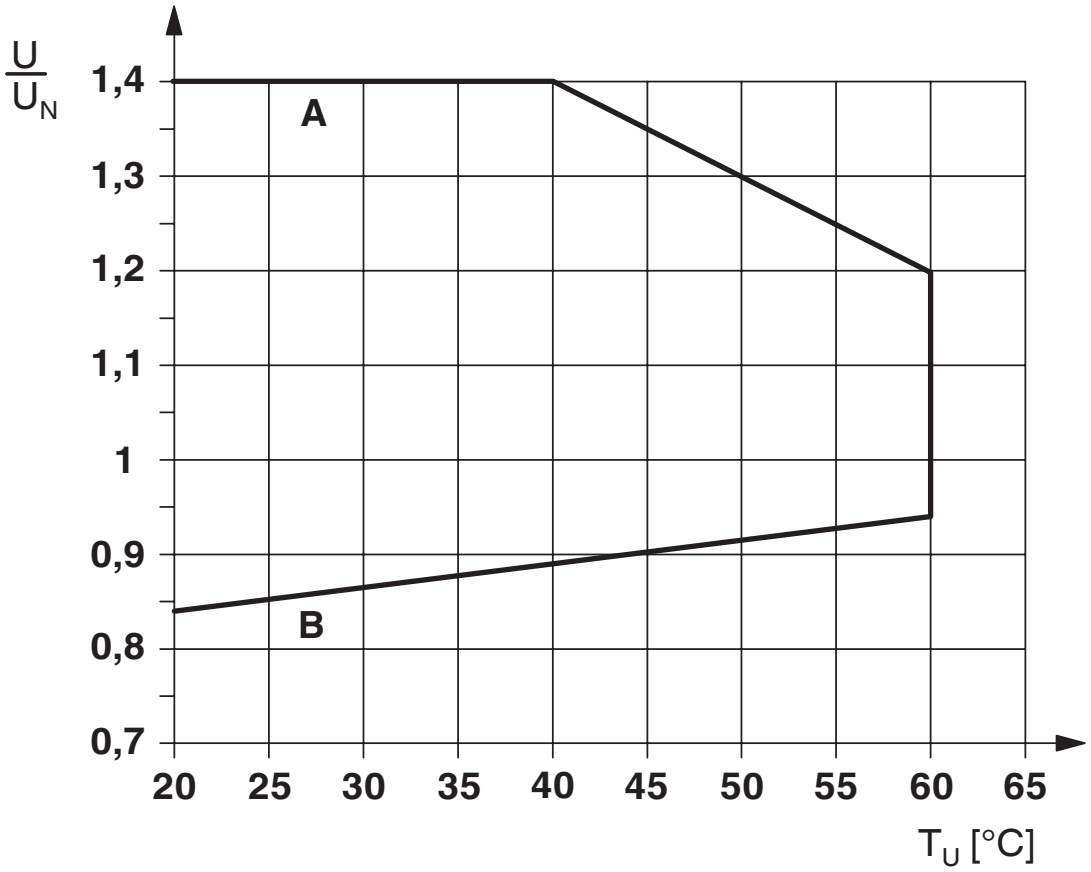

Curve A

Maximum permissible continuous voltage U_{max} with limiting continuous current on the contact side (see relevant technical data)

Curve B

Minimum permissible operate voltage U_{op} after pre-excitation (see relevant technical data)

Diagram

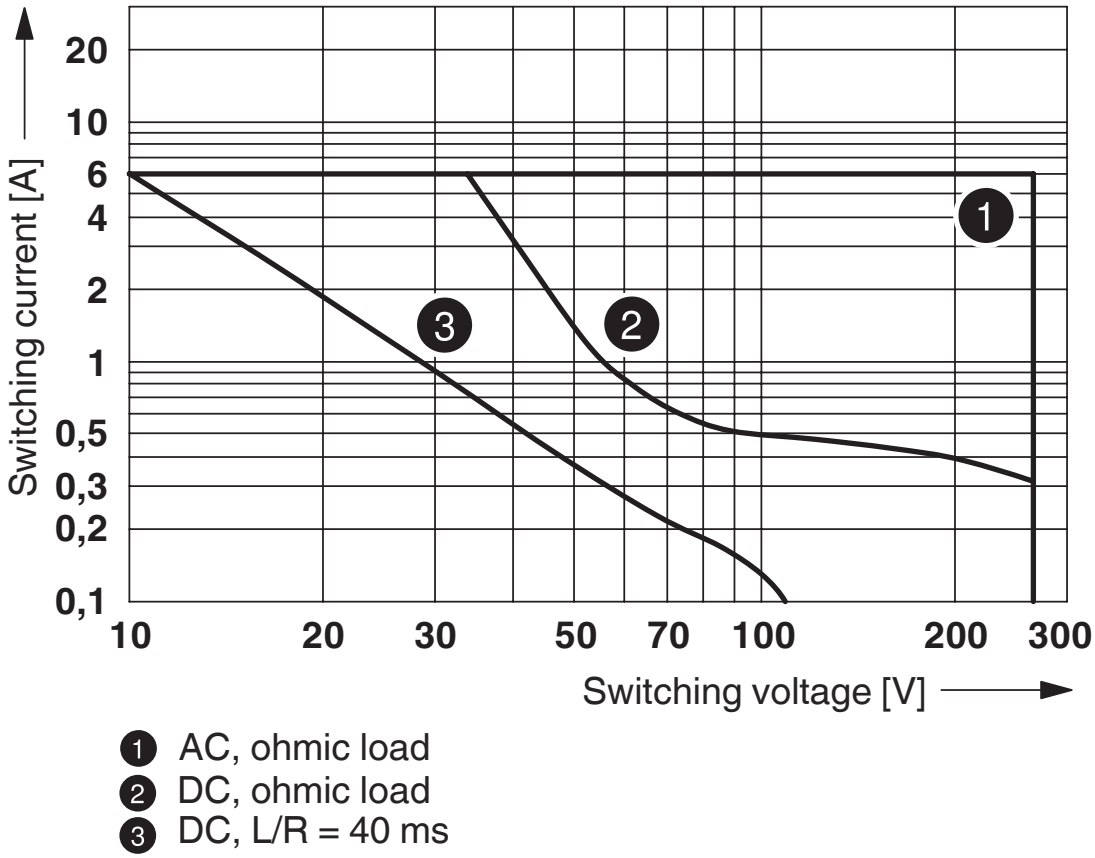

1 AC, ohmic load
2 DC, ohmic load
3 DC, L/R = 40 ms

Interrupting rating

Diagram

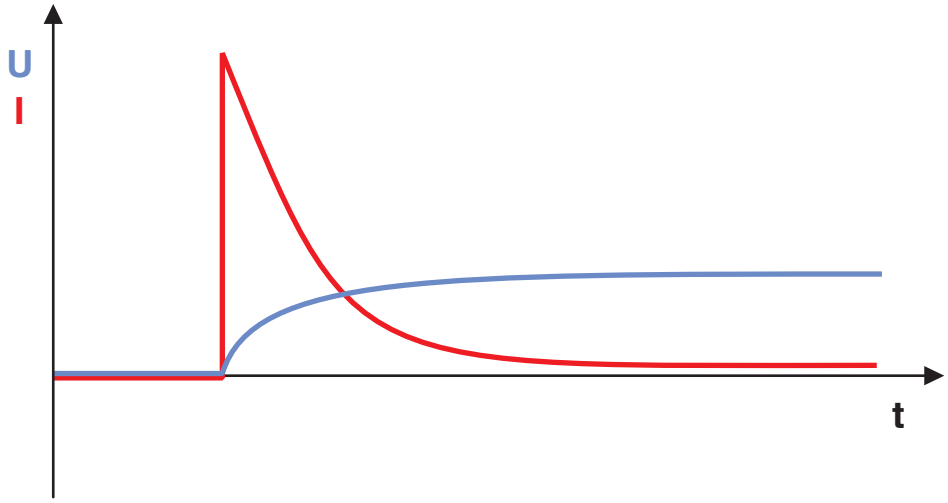

Basic behavior of capacitive loads:
- Very high inrush current
- Voltage increases with an e-function

Diagram

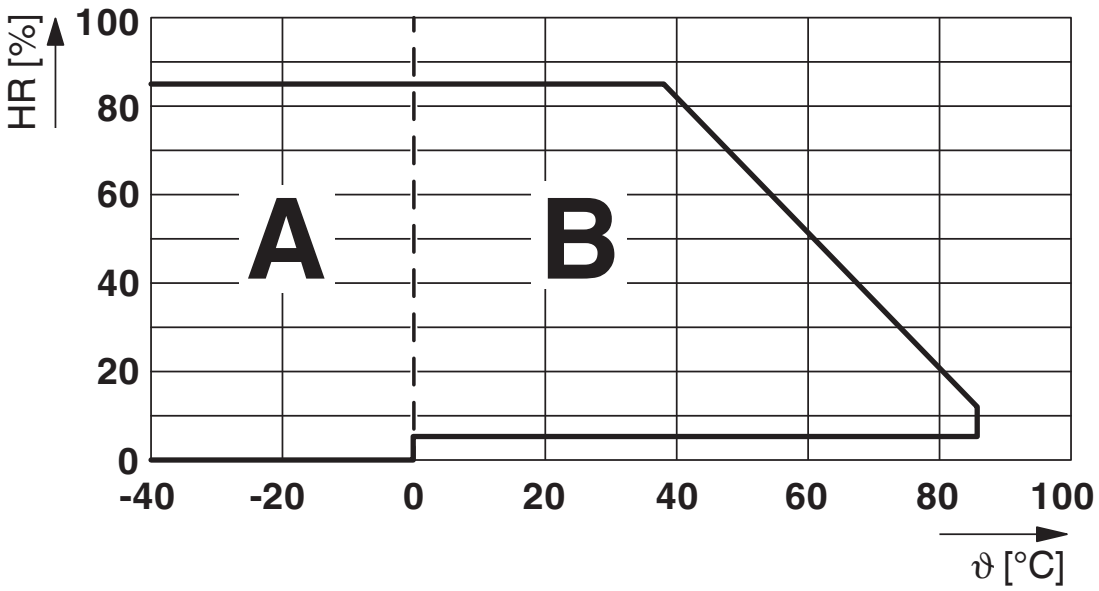

Permissible humidity for operation and storage.
The maximum permissible ambient temperature as specified in the data sheet must be observed.

Area A: Ice buildup at ambient temperatures ≤ 0°C must be prevented
Area B: Condensation at ambient temperatures > 0°C must be prevented

On 30 full days that are naturally distributed across an entire year, a humidity level of 95% is permissible at an ambient temperature ≤ 25°C.

Circuit diagram

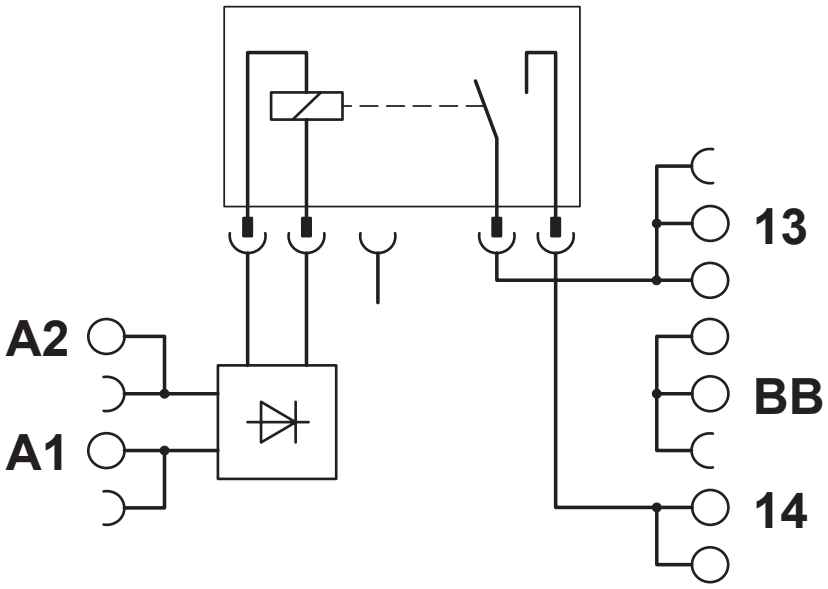

Approvals

To download certificates, visit the product detail page: https://www.phoenixcontact.com/us/products/1078680

DNV GL
Approval ID: TAE0000196

cULus Listed
Approval ID: E140324

Classifications

ECLASS

ECLASS-13.0	27371601
ECLASS-15.0	27371601

ETIM

ETIM 9.0	EC001437

UNSPSC

UNSPSC 21.0	39122300

Environmental product compliance

EU RoHS

Fulfills EU RoHS substance requirements	Yes
Exemption	7(a), 7(c)-I

China RoHS

Environment friendly use period (EFUP)	EFUP-50
	An article-related China RoHS declaration table can be found in the download area for the respective article under "Manufacturer declaration". For all articles with EFUP-E, no China RoHS declaration table issued and required.

EU REACH SVHC

REACH candidate substance (CAS No.)	Hexahydromethylphthalic anhydride(CAS: n/a)
	Lead(CAS: 7439-92-1)
SCIP	528a99a5-5e3b-423c-9a23-7789f254a9c7

Phoenix Contact 2025 © - all rights reserved
https://www.phoenixcontact.com

Phoenix Contact USA
586 Fulling Mill Road
Middletown, PA 17057, United States
(+717) 944-1300
info@phoenixcon.com