Data Sheet | Item Number: 2091-1636/024-000

Panel feedthrough male connector; clamping collar; 1.5 mm²; 6-pole; Pin spacing 3.5 mm; light gray

https://www.wago.com/2091-1636/024-000

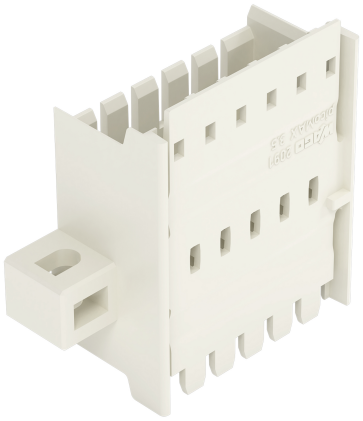

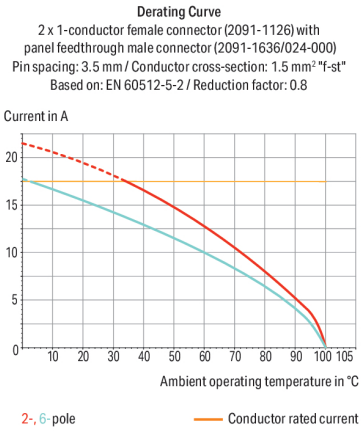

Color: light gray

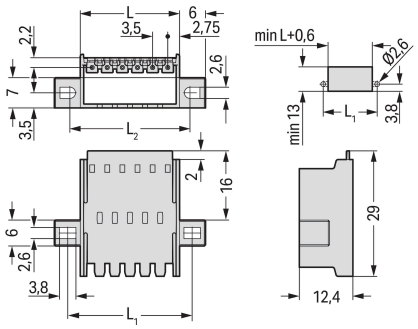

Dimensions in mm
L = (pole no. x pin spacing) + 2.0 mmL1 = (pole no. x pin spacing) + 7.8 mmL2 = (pole no. x pin spacing) + 6.8 mm

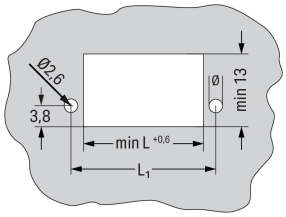

Dimensions in mm

Male connector, 2091 Series, light gray

This male connector (item number 2091-1636/024-000) is designed for fault-free electrical installations. Dimensions: (35 x 12.4 x 29) mm (width x height x depth).

Tin is used for coating the contact surfaces.

- Safe and fast installation
- Suitable for feedthrough in enclosures
- Pin spacing: 3.5 mm
- The right solution for every wiring task
- 6 connection points

Notes

Safety information	The **picoMAX® Pluggable Connection System** includes connectors without breaking capacity in accordance with DIN EN 61984. When used as intended, these connectors must not be connected/disconnected when live or under load.When used as intended, these connectors must not be connected/disconnected when live or under load. The circuit design should ensure header pins, which can be touched, are not live when unmated.

Electrical data

Ratings per	IEC/EN 60664-1		
Overvoltage category	III	III	II
Pollution degree	3	2	2
Nominal voltage	160 V	160 V	320 V
Rated impulse withstand voltage	2.5 kV	2.5 kV	2.5 kV
Rated current	10 A	10 A	10 A

Approvals per	UL 1059		
Use group	B	C	D
Rated voltage	300 V	-	300 V
Rated current	10 A	-	10 A

Connection Data

Total number of potentials	6
Number of connection types	1
Number of levels	1

Connection 1

Number of poles	6

Physical data

Pin spacing	3.5 mm / 0.138 inches
Width	35 mm / 1.378 inches
Height	12.4 mm / 0.488 inches
Depth	29 mm / 1.142 inches

Mechanical data

Variable coding	Yes
Mounting type	Mounting flange
Mounting type	Feed-through mounting Panel mounting
Anti-rotation protection	Yes
Suitable for through-panel applications	Yes

Plug-in connection

Contact type (pluggable connector)	Male connector/plug
Connector (connection type)	for pluggable connector
Mismating protection	No
Plugging without loss of pin spacing	Yes
Locking of plug-in connection	Locking latch

Continued on next page

Material data

Note (material data)	Information on material specifications can be found here
Color	light gray
Material group	I
Insulation material (main housing)	Polyphthalamide (PPA GF)
Flammability class per UL94	V0
Contact material	Electrolytic copper (E_{Cu})
Contact Plating	Tin
Fire load	0.036 MJ
Weight	3.3 g

Environmental requirements

Limit temperature range	-60 … +100 °C
Ambient temperature (installation)	-35 … +60 °C
Processing temperature	-35 … +60 °C

Commercial data

Product Group	26 (picoMAX Connectors)
PU (SPU)	50 pcs
Packaging type	Box
Country of origin	DE
GTIN	4050821161875
Customs tariff number	85366930000

Product Classification

UNSPSC	39121409
eCl@ss 10.0	27-14-11-06
eCl@ss 9.0	27-14-11-06
ETIM 9.0	EC001284
ETIM 10.0	EC001284
ECCN	NO US CLASSIFICATION

Environmental Product Compliance

RoHS Compliance Status	Compliant,No Exemption

Approvals / Certificates

General approvals

Approval	Standard	Certificate Name
CB DEKRA Certification B.V.	IEC 61984	NL-89884
CSA CSA Group	C22.2	2362521
CSA DEKRA Certification B.V.	C22.2 No. 158	2362521
KEMA/KEUR DEKRA Certification B.V.	EN 61984	71-129873
UL Underwriters Laboratories Inc.	UL 1977	E45171

General approvals

UR Underwriters Laboratories Inc.	UL 1059	E45172

Continued on next page

Downloads

Environmental Product Compliance

Compliance Search

Environmental Product Compliance
2091-1636/024-000

Documentation

Additional Information

Technical Section	03.04.2019	pdf 2027.26 KB

CAD/CAE-Data

CAD data

2D/3D Models
2091-1636/024-000

CAE data

ZUKEN Portal
2091-1636/024-000

1 Compatible Products

1.1 System counterpart

1.1.1 Female connector/socket



Item No.: 2091-1126
1-conductor female connector; push-button; Push-in CAGE CLAMP®; 1.5 mm²; Pin spacing 3.5 mm; 6-pole; 1,50 mm²; light gray

1.2 Optional Accessories

1.2.1 Coding

1.2.1.1 Coding



Item No.: 2091-1610
Coding key carrier; suitable for 3.5 mm pin spacing; orange

Continued on next page

Installation Notes



"Wire-to-wire" panel feedthrough connection
Notice: Male connectors must not be live when disconnected!

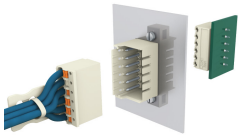

"Wire-to-board" panel feedthrough connection