Data sheet

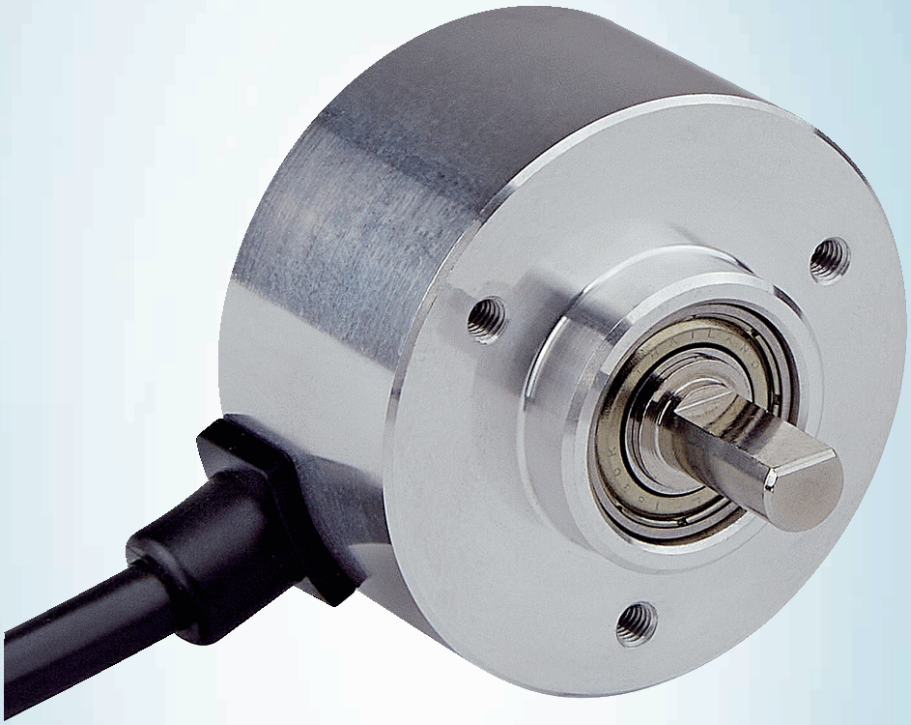

DLS40E-S3GV00600

DLS40

INCREMENTAL ENCODERS

SICK
Sensor Intelligence.

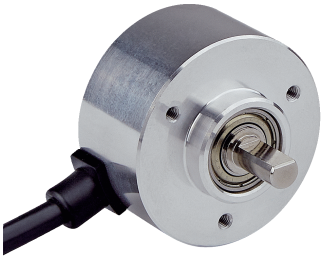

Illustration may differ

Ordering information

Type	part no.
DLS40E-S3GV00600	1109611

Other models and accessories ➜ www.sick.com/DLS40

Detailed technical data

Safety-related parameters

$MTTF_D$ (mean time to dangerous failure)	600 years (EN ISO 13849-1) [1]

[1] This product is a standard product and does not constitute a safety component as defined in the Machinery Directive. Calculation based on nominal load of components, average ambient temperature 40 °C, frequency of use 8760 h/a. All electronic failures are considered hazardous. For more information, see document no. 8015532.

Performance

Pulses per revolution	600
Measuring step	90°, electric/pulses per revolution
Duty cycle	≤ 0.5 ± 10 %

Interfaces

Communication interface	Incremental
Communication Interface detail	HTL / Push pull
Number of signal channels	3 channel
Output frequency	≤ 150 kHz
Load current	≤ 30 mA
Power consumption	≤ 2 W (without load)

Electronics

Connection type	Cable, 5-wire, radial, 2 m
Supply voltage	10 ... 27 V
Reference signal, number	1
Reverse polarity protection	✓
Short-circuit protection of the outputs	✓ [1]

[1] Protection against short circuit to GND and U_S. Short-circuit resistance is only guaranteed when Us and GND are connected correctly.

Mechanics

Mechanical design	Solid shaft, face mount flange

[1] Relates to encoders with 2 m cable connection.
[2] Higher values are possible using limited bearing life.
[3] Allow for self-heating of 1.3 K per 1,000 rpm when designing the operating temperature range.
[4] No permanent operation. Decreasing signal quality.

Shaft diameter	6 mmWith flat
Shaft length	12 mm
Weight	Approx. 130 g [1]
Shaft material	Stainless steel
Flange material	Aluminum
Housing material	Aluminum
Material, cable	PVC
Start up torque	0.3 Ncm
Operating torque	0.2 Ncm
Permissible shaft loading	40 N (radial) [2] 20 N (axial)
Operating speed	6,000 min^{-1} [3]
Maximum operating speed	≤ 8,000 min^{-1} [4]
Moment of inertia of the rotor	7.6 gcm^2
Bearing lifetime	2.0 x 10^9 revolutions
Angular acceleration	≤ 500,000 rad/s^2

[1] Relates to encoders with 2 m cable connection.
[2] Higher values are possible using limited bearing life.
[3] Allow for self-heating of 1.3 K per 1,000 rpm when designing the operating temperature range.
[4] No permanent operation. Decreasing signal quality.

Ambient data

EMC	According to EN 61000-6-2 and EN 61000-6-3
Enclosure rating	IP50
Permissible relative humidity	90 % (Condensation not permitted)
Operating temperature range	–10 °C ... +70 °C
Storage temperature range	–25 °C ... +85 °C
Resistance to shocks	100 g, 6 ms (EN 60068-2-27)
Resistance to vibration	20 g, 10 Hz ... 2,000 Hz (EN 60068-2-6)

Classifications

ECLASS 5.0	27270501
ECLASS 5.1.4	27270501
ECLASS 6.0	27270590
ECLASS 6.2	27270590
ECLASS 7.0	27270501
ECLASS 8.0	27270501
ECLASS 8.1	27270501
ECLASS 9.0	27270501
ECLASS 10.0	27270501
ECLASS 11.0	27270501
ECLASS 12.0	27270501
ETIM 5.0	EC001486

ETIM 6.0	EC001486
ETIM 7.0	EC001486
ETIM 8.0	EC001486
UNSPSC 16.0901	41112113

Certificates

EU declaration of conformity	✓
UK declaration of conformity	✓
ACMA declaration of conformity	✓
China-RoHS	✓

Dimensional drawing Solid shaft

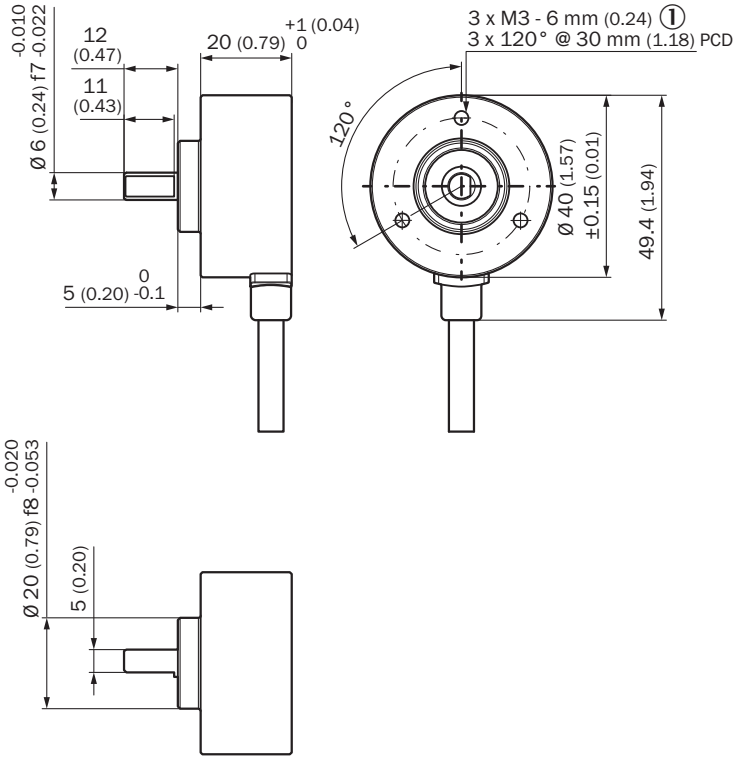

Dimensions in mm (inch)
① depth

PIN assignment

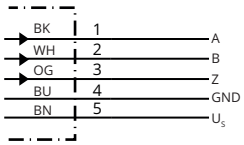

Wire colors (cable connection)	Signal	Description
Brown	U_S	Supply voltage

Wire colors (cable connection)	Signal	Description
Blue	GND	Ground connection
Black	A	Signal cable
White	B	Signal cable
Orange	Z	Signal cable

Diagrams HTL/Push pull

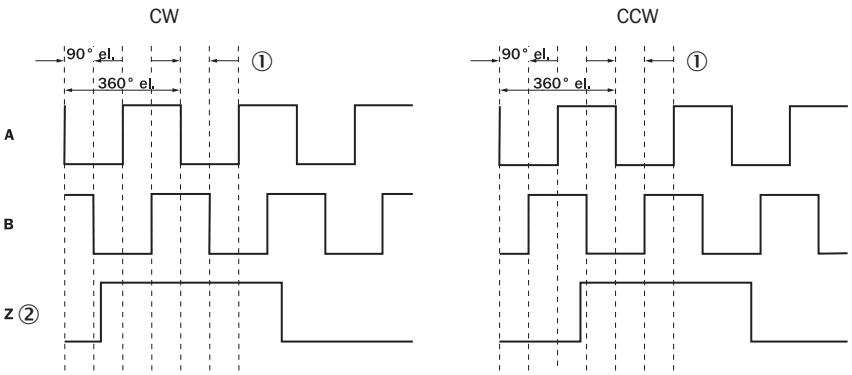

① Measuring step
② Only as reference

Operation note

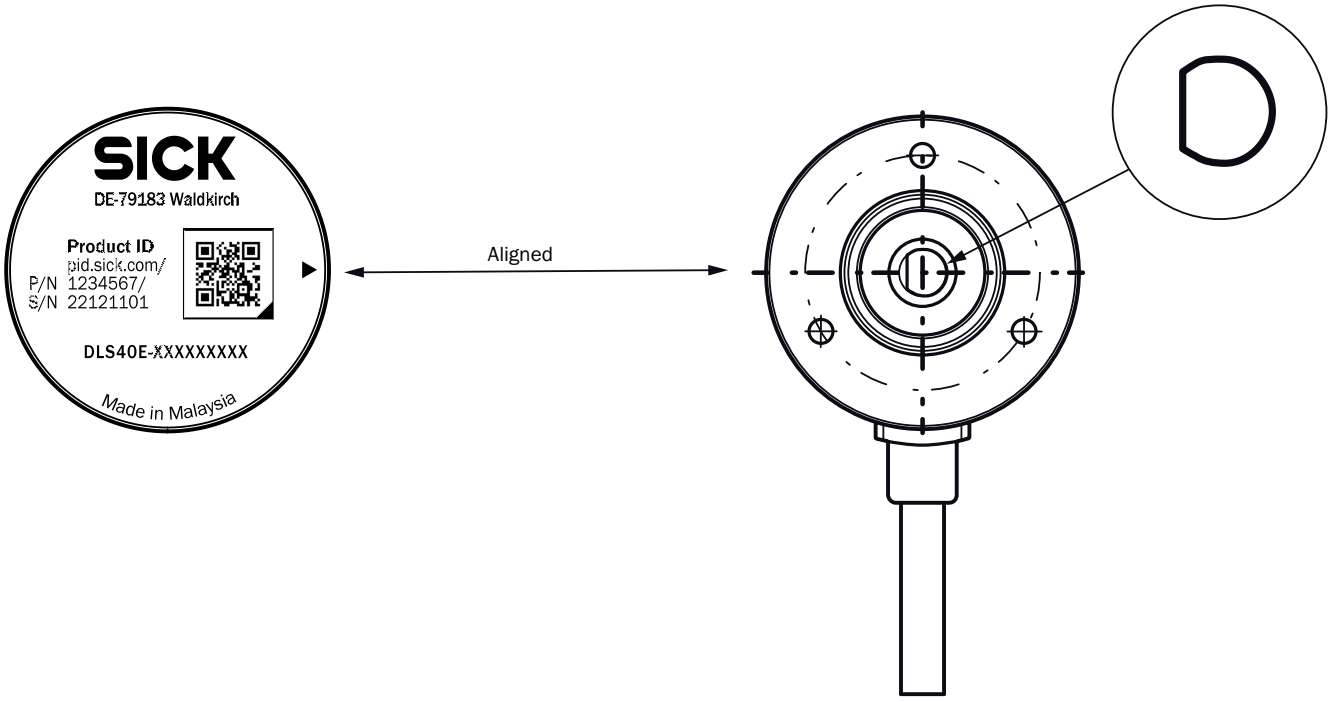

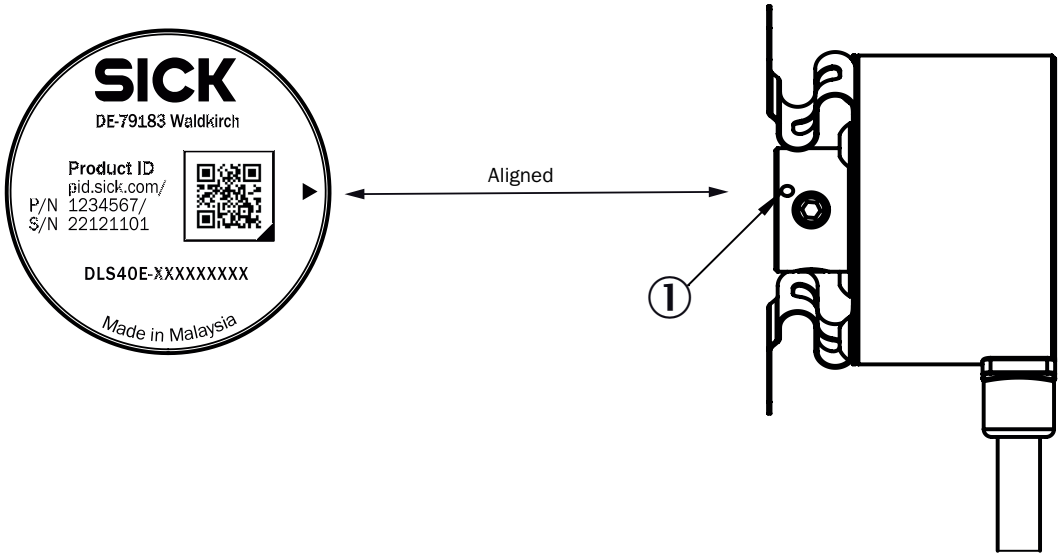

You can see the position with the mark on the rear side of the encoder
① Zero pulse mark on housing

Recommended accessories

Other models and accessories ➜ www.sick.com/DLS40

	Brief description	Type	part no.
measuring wheels and measuring wheel mechanics			
	• **Product segment:** Measuring wheels and measuring wheel mechanics • **Product family:** Measuring wheels • **Description:** Aluminium measuring wheel with O-ring (NBR70) for 6 mm solid shaft, circumference 200 mm	BEF-MR006020R	2055222
	• **Product segment:** Measuring wheels and measuring wheel mechanics • **Product family:** Measuring wheels • **Description:** Measuring wheel with O-ring (NBR70) for 6 mm solid shaft, circumference 300 mm	BEF-MR006030R	2055634
	• **Product segment:** Measuring wheels and measuring wheel mechanics • **Product family:** Measuring wheels • **Description:** Aluminium measuring wheel with O-ring (NBR70) for 6 mm solid shaft, circumference 500 mm	BEF-MR006050R	2055225
	• **Product segment:** Measuring wheels and measuring wheel mechanics • **Product family:** Measuring wheels • **Description:** Aluminum measuring wheel with cross-knurled surface for 6 mm solid shaft, circumference 200 mm	BEF-MR06200AK	4084745
	• **Product segment:** Measuring wheels and measuring wheel mechanics • **Product family:** Measuring wheels • **Description:** Aluminum measuring wheel with smooth polyurethane surface for 6 mm solid shaft, circumference 200 mm	BEF-MR06200AP	4084746
	• **Product segment:** Measuring wheels and measuring wheel mechanics • **Product family:** Measuring wheels • **Description:** Aluminum measuring wheel with ridged polyurethane surface for 6 mm solid shaft, circumference 200 mm	BEF-MR06200APG	4084748
	• **Product segment:** Measuring wheels and measuring wheel mechanics • **Product family:** Measuring wheels • **Description:** Aluminum measuring wheel with studded polyurethane surface for 6 mm solid shaft, circumference 200 mm	BEF-MR06200APN	4084747
	• **Product segment:** Measuring wheels and measuring wheel mechanics • **Product family:** Measuring wheel mechanics	BEF-0R-053-040	2064061

	Brief description	Type	part no.
	• **Description:** O-ring for measuring wheels (circumference 200 mm)		
	• **Product segment:** Measuring wheels and measuring wheel mechanics • **Product family:** Measuring wheel mechanics • **Description:** O-ring for measuring wheels (circumference 300 mm) • **Items supplied:** 2x O-ring	BEF-OR-083-050	2064076
	• **Product segment:** Measuring wheels and measuring wheel mechanics • **Product family:** Measuring wheel mechanics • **Description:** O-ring for measuring wheels (circumference 500 mm)	BEF-OR-145-050	2064074
shaft adaptation			
	• **Product segment:** Shaft adaptation • **Product:** Shaft couplings • **Description:** Bellows coupling, shaft diameter 6 mm / 6 mm, maximum shaft offset: radial ± 0.25 mm, axial ± 0.4 mm, angular +/- 4°; max. speed 10,000 rpm, –30 °C to +120 °C, max. torque 120 Ncm; material: stainless steel bellows, aluminum hub	KUP-0606-B	5312981
	• **Product segment:** Shaft adaptation • **Product:** Shaft couplings • **Description:** Cross-slotted coupling, shaft diameter 6 mm / 6 mm, maximum shaft offset: radial ± 0.3 mm, axial ± 0.2 mm, angle ± 3°; max. speed 10,000 rpm, –10° to +80 °C, max. torque 80 Ncm; material: fiber-glass reinforced polyamide, aluminum hub	KUP-0606-S	2056406
	• **Product segment:** Shaft adaptation • **Product:** Shaft couplings • **Description:** Bar coupling, shaft diameter 6 mm /8 mm, maximum shaft offset radial ± 0.3 mm, axial ± 0.2 mm, angle ± 3°, max. speed 10,000 rpm, torsion spring rigidity 38 Nm/wheel; material: fiber-glass reinforced polyamide, aluminum hub	KUP-0608-S	5314179
	• **Product segment:** Shaft adaptation • **Product:** Shaft couplings • **Description:** Bellows coupling, shaft diameter 6 mm / 10 mm, maximum shaft offset: radial ± 0.25 mm, axial ± 0.4 mm, angular +/- 4°; max. speed 10,000 rpm, –30 °C to +120 °C, max. torque 120 Ncm; material: stainless steel bellows, aluminum hub	KUP-0610-B	5312982
	• **Product segment:** Shaft adaptation • **Product:** Shaft couplings • **Description:** Double loop coupling, shaft diameter 6 mm / 10 mm, max. shaft offset: radially +/- 2,5 mm, axially +/-3 mm, angle +/- 10 degrees;max. speed 3.000 rpm, –30 to +80 degrees Celsius, torsional spring stiffness of 25 Nm/rad	KUP-0610-D	5326697
	• **Product segment:** Shaft adaptation • **Product:** Shaft couplings • **Description:** Spring washer coupling, shaft diameter 6 mm / 10 mm, Maximum shaft offset: radial +/- 0.3 mm, axial +/- 0.4 mm, angular +/- 2.5°; max. speed 12,000 rpm, –10° to +80 °C, max. torque 60 Ncm; material: aluminum flange, glass fiber-reinforced polyamide membrane and hardened steel coupling pin	KUP-0610-F	5312985
	• **Product segment:** Shaft adaptation • **Product:** Shaft couplings • **Description:** Bar coupling, shaft diameter 6 mm / 10 mm, max. shaft offset: radial ± 0,3 mm, axial ± 0,3 mm, angular ± 3°; max. speed 10.000 rpm, –10° to +80 °C, max. torque: 80 Ncm, material: fiber-glass reinforced polyamide, aluminum hub	KUP-0610-S	2056407

SICK AT A GLANCE

SICK is one of the leading manufacturers of intelligent sensors and sensor solutions for industrial applications. A unique range of products and services creates the perfect basis for controlling processes securely and efficiently, protecting individuals from accidents and preventing damage to the environment.

We have extensive experience in a wide range of industries and understand their processes and requirements. With intelligent sensors, we can deliver exactly what our customers need. In application centers in Europe, Asia and North America, system solutions are tested and optimized in accordance with customer specifications. All this makes us a reliable supplier and development partner.

Comprehensive services complete our offering: SICK LifeTime Services provide support throughout the machine life cycle and ensure safety and productivity.

For us, that is “Sensor Intelligence.”

WORLDWIDE PRESENCE:

Contacts and other locations –www.sick.com