MCR-SL-D-SPA-UI - Setpoint adjuster

2710314

https://www.phoenixcontact.com/us/products/2710314

Please be informed that the data shown in this PDF document is generated from our online catalog. Please find the complete data in the user documentation. Our general terms of use for downloads are valid.



Digital setpoint encoders with manual and automatic ramp for defining current and voltage signals, 4-pos. display

Your advantages

- Automatic setpoint definition with hold function and 20 interpolation points
- Manual setpoint definition via direct input
- Flexible, adjustable signal ranges of 0 ... 12 V or 0 ... 24 mA
- Data backup in the event of power failure
- Manual setpoint definition with incremental setting
- Display value parameterization
- Electrical isolation between output and supply

Commercial data

Item number	2710314
Packing unit	1 pc
Minimum order quantity	1 pc
Sales key	C401
Product key	DK1141
GTIN	4046356091190
Weight per piece (including packing)	87.6 g
Weight per piece (excluding packing)	100 g
Customs tariff number	90328900
Country of origin	DE

Technical data

Product properties

Product type	Digital displays
Configuration	Keyboard

System properties

Functionality

Configuration	Keyboard

Electrical properties

Maximum power dissipation for nominal condition	0.8 W (20 mA, 500 Ω)
Test voltage output/power supply	500 V AC (50 Hz, 60 s)
Maximum temperature coefficient	0.02 %/K
Maximum transmission error	< 0.2 % ((full-scale) at rated voltage)

Supply

Supply voltage range	10 V DC ... 30 V DC
Power consumption	1 W (With 24 mA/12 V)

Input data

Signal

Display	7-segment, 8 mm, red
Number of positions displayed	4.00
Switching level "1" signal	4 V DC ... 30 V DC
Switching level "0" signal	0 V DC ... 2 V DC
Measuring rate	$0.1s^{-1}$ / $0.5s^{-1}$

Output data

Signal

Voltage output signal	0 V ... 12 V
Current output signal	0 mA ... 24 mA
Load/output load voltage output	≥ 2 kΩ
Load/output load current output	≤ 500 Ω (up to 20 mA)
	≤ 400 Ω (> 20 mA)
Ripple	≤ 10 mV_{PP}
Number of positions displayed	4
Display	7-segment LED; 8 mm; red

Connection data

Connection method	Screw connection
Stripping length	8 mm
Screw thread	M3

Conductor cross-section rigid	0.14 mm² ... 1.5 mm²
Conductor cross-section flexible	0.14 mm² ... 1.5 mm²
Conductor cross-section AWG	26 ... 16

Dimensions

Width	48 mm
Height	24 mm
Depth	68 mm

Material specifications

Housing material	Macrolon 2405

Environmental and real-life conditions

Ambient conditions

Degree of protection	IP65 (Front)
Ambient temperature (operation)	-20 °C ... 65 °C
Ambient temperature (storage/transport)	-25 °C ... 85 °C

Approvals

CE

Certificate	CE-compliant

UL, USA/Canada

Identification	UL 863

EMC data

Noise immunity	EN 61000-6-2
	EN 61000-4-2

Noise emission

Standards/regulations	EN 55011 / class B

Mounting

Mounting type	Panel mount

Drawings

Dimensional drawing

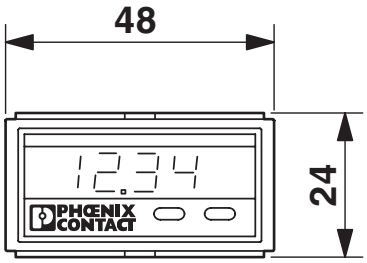

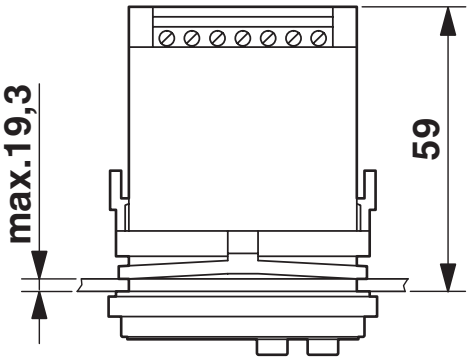

Circuit diagram

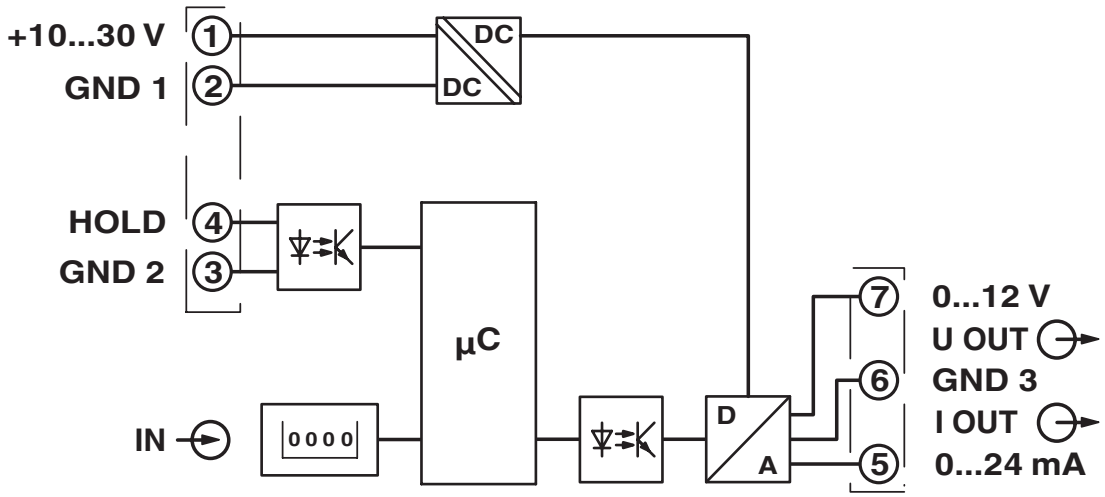

Block diagram

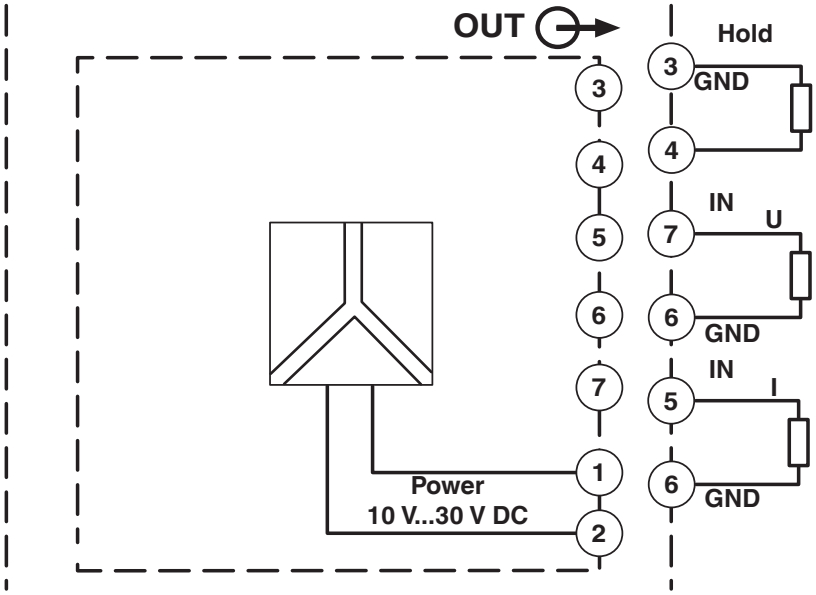

Block diagram MCR-SL-D-SPA-UI

Approvals

To download certificates, visit the product detail page: https://www.phoenixcontact.com/us/products/2710314

cUL Recognized
Approval ID: FILE E 197577

UL Recognized
Approval ID: FILE E 197577

EAC
Approval ID: RU*DE.*08.B.01522/19

Classifications

ECLASS

ECLASS-13.0	27210301
ECLASS-15.0	27210301

ETIM

ETIM 9.0	EC011349

UNSPSC

UNSPSC 21.0	39121000

Environmental product compliance

EU RoHS

Fulfills EU RoHS substance requirements	Yes, No exemptions

China RoHS

Environment friendly use period (EFUP)	EFUP-E
	No hazardous substances above the limits

EU REACH SVHC

REACH candidate substance (CAS No.)	No substance above 0.1 wt%

Phoenix Contact 2025 © - all rights reserved
https://www.phoenixcontact.com

Phoenix Contact USA
586 Fulling Mill Road
Middletown, PA 17057, United States
(+717) 944-1300
info@phoenixcon.com