5-1377173-2 ✔ ACTIVE

PLASTI-GRIP

TE Internal #: 5-1377173-2

Splices, Parallel Splice, 22 - 16 AWG Wire Size, .326 - 1.31 mm² Wire Size, 509 - 3260 CMA Wire Size, Length 1.076 in [27.33 mm], PLASTI-GRIP

View on TE.com >

Terminals & Splices > Splices



Splice Type: **Parallel Splice**

Wire Size: **.326 - 1.31 mm²**

Sealable: **No**

Compatible Insulation Diameter Range: **2.67 - 3.56 mm [.105 - .14 in]**

Features

Product Type Features

Splice Type	Parallel Splice
Sealable	No
Wire Insulation Support Retention Type	Non-Insulation Support

Contact Features

Terminal Plating Material	Tin
Barrel Type	Closed

Mechanical Attachment

Wire Insulation Support	Without

Dimensions

Wire Size	509 - 3260 CMA
Compatible Insulation Diameter Range	2.67 - 3.56 mm[.105 - .14 in]
Product Length	27.33 mm[1.076 in]

Usage Conditions

Insulation Option	Partially Insulated

Operating Temperature Range	105 °C[221 °F]

Operation/Application

Compatible With Wire Plating Material	Tin
Compatible With Wire Base Material	Copper

Packaging Features

Packaging Quantity	100
Packaging Method	Small Pack

Product Compliance

For compliance documentation, visit the product page on TE.com>

EU RoHS Directive 2011/65/EU	Compliant
EU ELV Directive 2000/53/EC	Compliant
China RoHS 2 Directive MIIT Order No 32, 2016	No Restricted Materials Above Threshold
EU REACH Regulation (EC) No. 1907/2006	Current ECHA Candidate List: JAN 2024 (240) Candidate List Declared Against: JAN 2024 (240) Does not contain REACH SVHC
Halogen Content	Not Low Halogen - contains Br or Cl > 900 ppm.
Solder Process Capability	Not applicable for solder process capability

Product Compliance Disclaimer

This information is provided based on reasonable inquiry of our suppliers and represents our current actual knowledge based on the information they provided. This information is subject to change. The part numbers that TE has identified as EU RoHS compliant have a maximum concentration of 0.1% by weight in homogenous materials for lead, hexavalent chromium, mercury, PBB, PBDE, DBP, BBP, DEHP, DIBP, and 0.01% for cadmium, or qualify for an exemption to these limits as defined in the Annexes of Directive 2011/65/EU (RoHS2). Finished electrical and electronic equipment products will be CE marked as required by Directive 2011/65/EU. Components may not be CE marked. Additionally, the part numbers that TE has identified as EU ELV compliant have a maximum concentration of 0.1% by weight in homogenous materials for lead, hexavalent chromium, and mercury, and 0.01% for cadmium, or qualify for an exemption to these limits as defined in the Annexes of Directive 2000/53/EC (ELV). Regarding the REACH Regulation, the information TE provides on SVHC in articles for this part number is based on the latest European Chemicals Agency (ECHA) 'Guidance on requirements for substances in articles' posted at this URL: https://echa.europa.eu/guidance-documents/guidance-on-reach

Compatible Parts



TE Part # 34070
PG BUTT SPLC 22-16COMM22-18MIL



TE Part # 1SET141002R0000
SP015

Also in the Series | PLASTI-GRIP



Compression Connectors(3)



Crimp Wire Pins, Tabs & Ferrules(22)



Ring Terminals(324)

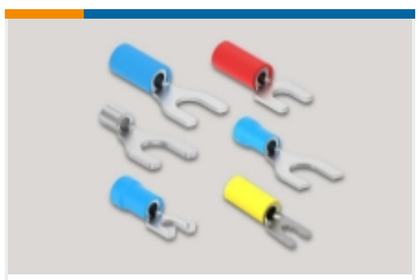

Spade Terminals(178)



Splices(47)

Customers Also Bought

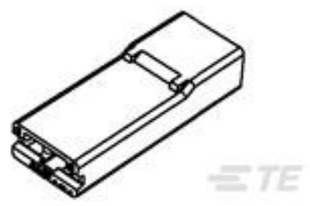

TE Part # 7-1377174-6
SMP 0-0735075-0



TE Part # 1-2176507-3
CJP 200W 5R6 5% Lead

TE Part # 2176509-4
CJP 400W 2R7 5% Lead



TE Part # 4-2176329-4
CRGP 1210 39K 1%



TE Part # 7-1768045-7
STD15Y-3



TE Part # 3-1377172-5
SMP 0-0036916-0

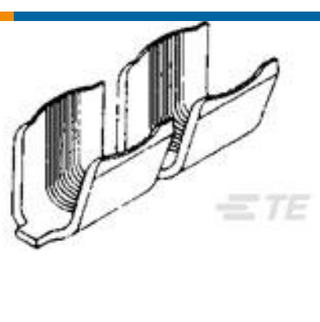

TE Part # 42779-2
SPLICE AMPLIVAR 3000-7000

TE Part # 1-2159395-8
IBM 00LU389 ETHERNET



TE Part # 374910-E
SRCP 2,54 6 M 1 SMD 137 E1 094 * GURT *

TE Part # 8-1372713-1
cutting blade

Documents

Product Drawings

SMP 0-0034070-0

English

CAD Files

3D PDF

3D

Customer View Model

ENG_CVM_CVM_5-1377173-2_H1.2d_dxf.zip

English

Customer View Model

ENG_CVM_CVM_5-1377173-2_H1.3d_igs.zip

English

Customer View Model

ENG_CVM_CVM_5-1377173-2_H1.3d_stp.zip

English

By downloading the CAD file I accept and agree to the Terms and Conditionsof use.

Datasheets & Catalog Pages

RADIATION_RESISTANT_PRE-INSULATED_TERMINALS_SPLICES

English

Product Specifications

Application Specification

English