Low Current SMD LED PLCC-2

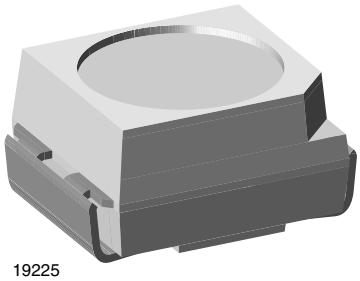

19225

FEATURES

- SMD LED with exceptional brightness
- Compatible with automatic placement equipment
- EIA and ICE standard package
- Compatible with IR reflow, vapor phase and wave solder processes according to CECC 00802 and J-STD-020
- Available in 8 mm tape
- Low profile package
- Non-diffused lens: excellent for coupling to light pipes and backlighting
- Very low power consumption
- Luminous intensity ratio in one packaging unit $I_{Vmax.}/I_{Vmin.} \leq 1.6$
- ESD withstand voltage: up to 2 kV according to JESD22-A114-B
- Preconditioning according to JEDEC® level 2a
- AEC-Q101 qualified
- Material categorization: for definitions of compliance please see www.vishay.com/doc?99912

AUTOMOTIVE GRADE
Pb-free
e3
RoHS COMPLIANT
HALOGEN FREE
GREEN (5-2008)

DESCRIPTION

These new devices have been designed to meet the increasing demand for AlInGaP based low current SMD LEDs.

The package of the VLM.30.. is the PLCC-2 package.

It consists of a lead frame which is embedded in a white thermoplast. The reflector inside this package is filled up with clear epoxy.

PRODUCT GROUP AND PACKAGE DATA

- Product group: LED
- Package: SMD PLCC-2
- Product series: low current
- Angle of half intensity: ± 60°

APPLICATIONS

- Automotive: backlighting in dashboards and switches
- Telecommunication: indicator and backlighting in telephone and fax
- Indicator and backlight for audio and video equipment
- Indicator and backlight for battery driven equipment
- Indicator and backlight in office equipment
- Flat backlight for LCDs, switches, and symbols
- General use

PARTS TABLE

PART	COLOR	LUMINOUS INTENSITY (mcd)			at I_F (mA)	WAVELENGTH (nm)			at I_F (mA)	FORWARD VOLTAGE (V)			at I_F (mA)	TECHNOLOGY
		MIN.	TYP.	MAX.		MIN.	TYP.	MAX.		MIN.	TYP.	MAX.		
VLMS3000-GS08	Super red	2.8	10	-	2	624	630	636	2	-	1.8	2.2	2	AlInGaP
VLMS30J1K2-GS08	Super red	4.5	8.5	11.2	2	624	630	636	2	-	1.8	2.2	2	AlInGaP
VLMS30K1L2-GS08	Super red	7.1	10.5	18	2	624	630	636	2	-	1.8	2.2	2	AlInGaP
VLMS30J1L2-GS08	Super red	4.5	10	18	2	624	630	636	2	-	1.8	2.2	2	AlInGaP
VLMS30J1L2-GS18	Super red	4.5	10	18	2	624	630	636	2	-	1.8	2.2	2	AlInGaP
VLMS30K2L2-GS08	Super red	9	12	18	2	624	630	636	2	-	1.8	2.2	2	AlInGaP
VLMO30L1M2-GS08	Orange	11.2	16.5	28	2	600	605	609	2	-	1.8	2.2	2	AlInGaP
VLMO30L1M2-GS18	Orange	11.2	16.5	28	2	600	605	609	2	-	1.8	2.2	2	AlInGaP
VLMO30K1M2-GS08	Orange	7.1	16	28	2	600	605	609	2	-	1.8	2.2	2	AlInGaP
VLMY3000-GS08	Yellow	4.5	11.6	-	2	581	587	594	2	-	1.8	2.2	2	AlInGaP
VLMY30J2L1-GS08	Yellow	5.6	10.6	14	2	581	587	594	2	-	1.8	2.2	2	AlInGaP
VLMY30K2M1-GS08	Yellow	9	12.3	22.4	2	581	587	594	2	-	1.8	2.2	2	AlInGaP
VLMY30J2M1-GS08	Yellow	5.6	11.6	22.4	2	581	587	594	2	-	1.8	2.2	2	AlInGaP

For technical questions, contact: LED@vishay.com
THIS DOCUMENT IS SUBJECT TO CHANGE WITHOUT NOTICE. THE PRODUCTS DESCRIBED HEREIN AND THIS DOCUMENT ARE SUBJECT TO SPECIFIC DISCLAIMERS, SET FORTH AT www.vishay.com/doc?91000

ABSOLUTE MAXIMUM RATINGS (T_{amb} = 25 °C, unless otherwise specified)
VLMS30.., VLMO30.., VLMY30..

PARAMETER	TEST CONDITION	SYMBOL	VALUE	UNIT
Reverse voltage [1]		V_R	6	V
DC forward current		I_F	15	mA
Surge forward current	$t_p \leq 10$ µs	I_{FSM}	0.1	A
Power dissipation		P_V	40	mW
Junction temperature		T_j	125	°C
Operating temperature range		T_{amb}	-40 to +100	°C
Storage temperature range		T_{stg}	-40 to +100	°C
Thermal resistance junction to ambient	Mounted on PC board (pad size > 16 mm²)	R_{thJA}	400	K/W

Note

[1] Driving the LED in reverse direction is suitable for short term application

OPTICAL AND ELECTRICAL CHARACTERISTICS (T_{amb} = 25 °C, unless otherwise specified)
VLMS30.., SUPER RED

PARAMETER	TEST CONDITION	PART	SYMBOL	MIN.	TYP.	MAX.	UNIT
Luminous intensity [1]	I_F = 2 mA	VLMS3000	I_V	2.8	10	-	mcd
	I_F = 2 mA	VLMS30J1K2	I_V	4.5	8.5	11.2	mcd
	I_F = 2 mA	VLMS30K1L2	I_V	7.1	10.5	18	mcd
	I_F = 2 mA	VLMS30J1L2	I_V	4.5	10	18	mcd
	I_F = 2 mA	VLMS30K2L2	I_V	9	12	18	mcd
Dominant wavelength	I_F = 2 mA		λ_d	624	630	636	nm
Peak wavelength	I_F = 2 mA		λ_p	-	635	-	nm
Angle of half intensity	I_F = 2 mA		φ	-	± 60	-	°
Forward voltage	I_F = 2 mA		V_F	-	1.8	2.2	V
Reverse voltage	I_R = 10 µA		V_R	6	15	-	V

Note

[1] In one packing unit $I_{Vmax.}/I_{Vmin.} \leq 1.6$

OPTICAL AND ELECTRICAL CHARACTERISTICS (T_{amb} = 25 °C, unless otherwise specified)
VLMO30.., ORANGE

PARAMETER	TEST CONDITION	PART	SYMBOL	MIN.	TYP.	MAX.	UNIT
Luminous intensity [1]	I_F = 2 mA	VLMO30L1M2	I_V	11.2	16.5	28	mcd
	I_F = 2 mA	VLMO30K1M2	I_V	7.1	16	28	mcd
Dominant wavelength	I_F = 2 mA		λ_d	600	605	609	nm
Peak wavelength	I_F = 2 mA		λ_p	-	610	-	nm
Angle of half intensity	I_F = 2 mA		φ	-	± 60	-	°
Forward voltage	I_F = 2 mA		V_F	-	1.8	2.2	V
Reverse voltage	I_R = 10 µA		V_R	6	15	-	V

Note

[1] In one packing unit $I_{Vmax.}/I_{Vmin.} \leq 1.6$

For technical questions, contact: LED@vishay.com
THIS DOCUMENT IS SUBJECT TO CHANGE WITHOUT NOTICE. THE PRODUCTS DESCRIBED HEREIN AND THIS DOCUMENT ARE SUBJECT TO SPECIFIC DISCLAIMERS, SET FORTH AT www.vishay.com/doc?91000

OPTICAL AND ELECTRICAL CHARACTERISTICS (T_{amb} = 25 °C, unless otherwise specified) VLMY30.., YELLOW							
PARAMETER	TEST CONDITION	PART	SYMBOL	MIN.	TYP.	MAX.	UNIT
Luminous intensity [1]	I_F = 2 mA	VLMY3000	I_V	4.5	11.6	-	mcd
	I_F = 2 mA	VLMY30J2L1	I_V	5.6	10.6	14	mcd
	I_F = 2 mA	VLMY30K2M1	I_V	9	12.3	22.4	mcd
	I_F = 2 mA	VLMY30J2M1	I_V	5.6	11.6	22.4	mcd
Dominant wavelength	I_F = 2 mA		λ_d	581	587	594	nm
Peak wavelength	I_F = 2 mA		λ_p	-	585	-	nm
Angle of half intensity	I_F = 2 mA		φ	-	± 60	-	°
Forward voltage	I_F = 2 mA		V_F	-	1.8	2.2	V
Reverse voltage	I_R = 10 µA		V_R	6	15	-	V

Note

[1] In one packing unit $I_{Vmax.}/I_{Vmin.} \leq 1.6$

LUMINOUS ITENSITY CLASSIFICATION			
GROUP STANDARD	LIGHT INTENSITY (mcd)		
	OPTIONAL	MIN.	MAX.
H	1	2.8	3.55
	2	3.55	4.5
J	1	4.5	5.6
	2	5.6	7.1
K	1	7.1	9.0
	2	9.0	11.2
L	1	11.2	14.0
	2	14.0	18.0
M	1	18.0	22.4
	2	22.4	28.0

Note

- Luminous Intensity is tested at a current pulse duration of 25 ms and an accuracy of ± 11 %. The above type numbers represent the order grous which include only a few brightness groups. Only one group will be shipped in one reel (there will be no mixing of two groups on each reel). In order to ensure availability, single brightness groups will not be orderable. In a similar manner for colors where wavelength groups are measured and binned, single wavelength groups will be shipped in any one reel. In order to ensure availability, single wavelength groups will not be orderable

COLOR CLASSIFICATION				
GROUP	YELLOW		ORANGE	
	DOM. WAVELENGTH (nm)			
	MIN.	MAX.	MIN.	MAX.
1	581	584		
2	583	586	600	603
3	585	588	602	605
4	587	590	604	607
5	589	592	606	609
6	591	594		

Note

- Wavelengths are tested at a current pulse duration of 25 ms

CROSSING TABLE	
VISHAY	OSRAM
VLMS30J1K2	LST67K-J1K2
VLMS30J1L2	LST67K-J1L2
VLMS30K1L2	LST67K-K1L2
VLMO30K1M2	LOT67K-K1M2
VLMO30L1M2	LOT67K-L1M2
VLMY30J2L1	LYT67K-J2L1
VLMY30J2M1	LYT67K-J2M1
VLMY30K2M1	LYT67K-K2M1

For technical questions, contact: LED@vishay.com
THIS DOCUMENT IS SUBJECT TO CHANGE WITHOUT NOTICE. THE PRODUCTS DESCRIBED HEREIN AND THIS DOCUMENT ARE SUBJECT TO SPECIFIC DISCLAIMERS, SET FORTH AT www.vishay.com/doc?91000

TYPICAL CHARACTERISTICS (T_{amb} = 25 °C, unless otherwise specified)

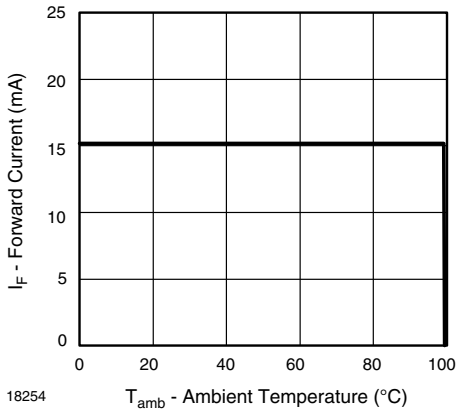

Fig. 1 - Forward Current vs. Ambient Temperature

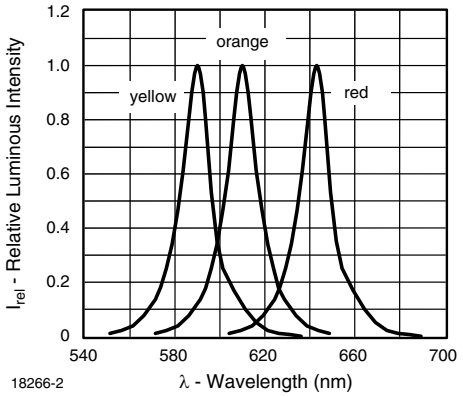

Fig. 4 - Relative Intensity vs. Wavelength

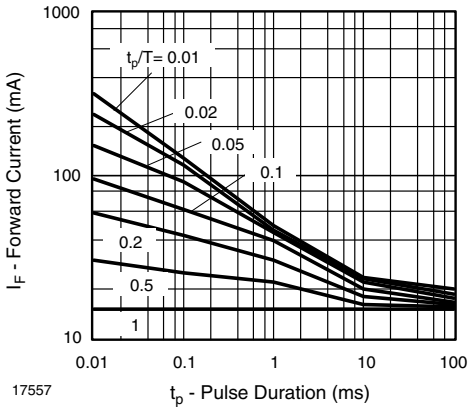

Fig. 2 - Forward Current vs. Pulse Length

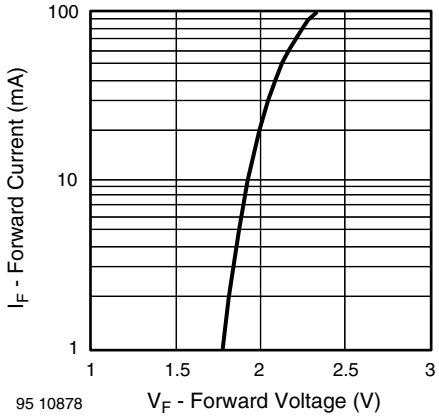

Fig. 5 - Forward Current vs. Forward Voltage

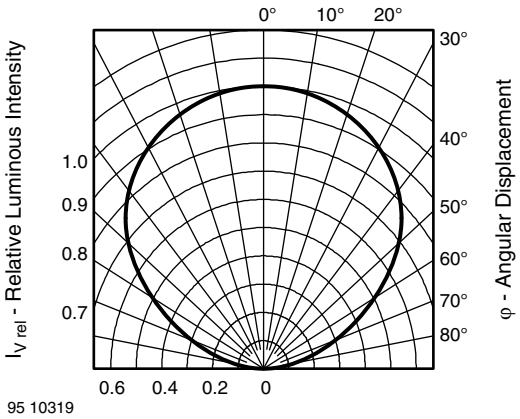

Fig. 3 - Relative Luminous Intensity vs. Angular Displacement

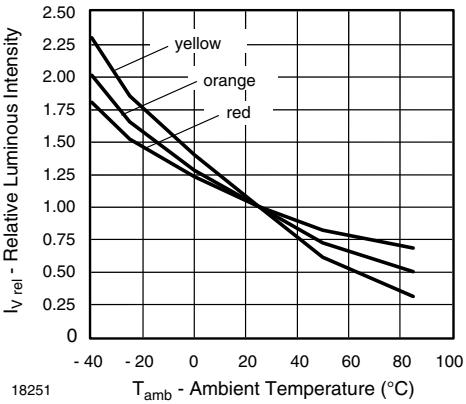

Fig. 6 - Relative Luminous Intensity vs. Ambient Temperature

For technical questions, contact: LED@vishay.com
THIS DOCUMENT IS SUBJECT TO CHANGE WITHOUT NOTICE. THE PRODUCTS DESCRIBED HEREIN AND THIS DOCUMENT ARE SUBJECT TO SPECIFIC DISCLAIMERS, SET FORTH AT www.vishay.com/doc?91000

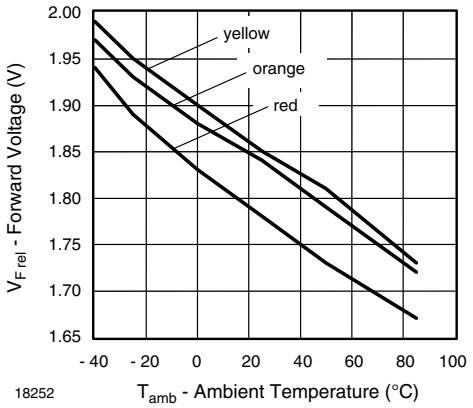

Fig. 7 - Relative Forward Voltage vs. Ambient Temperature

PACKAGE DIMENSIONS in millimeters

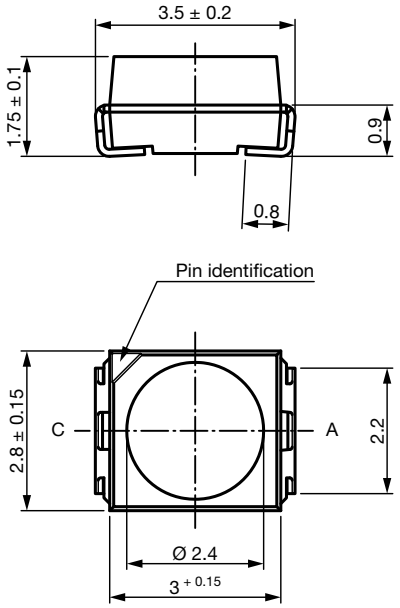

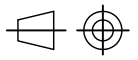

technical drawings according to DIN specifications

Drawing-No.: 6.541-5067.01-4
Issue: 7; 12.03.14

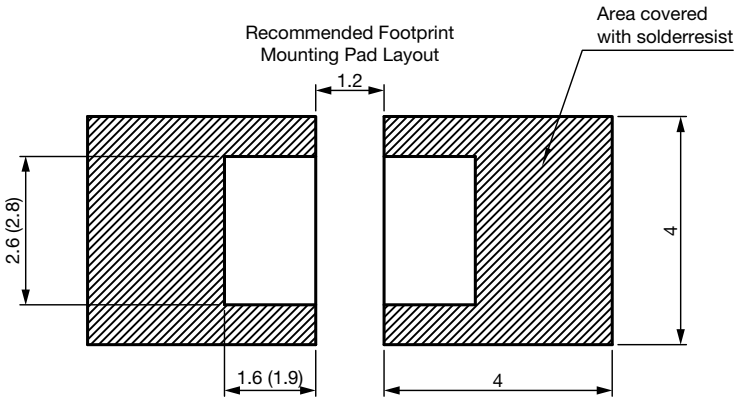

For technical questions, contact: LED@vishay.com
THIS DOCUMENT IS SUBJECT TO CHANGE WITHOUT NOTICE. THE PRODUCTS DESCRIBED HEREIN AND THIS DOCUMENT ARE SUBJECT TO SPECIFIC DISCLAIMERS, SET FORTH AT www.vishay.com/doc?91000

METHOD OF TAPING / POLARITY AND TAPE AND REEL

SMD LED (VLM.3 - SERIES)

Vishay's LEDs in SMD packages are available in an antistatic 8 mm blister tape (in accordance with DIN IEC 40 (CO) 564) for automatic component insertion. The blister tape is a plastic strip with impressed component cavities, covered by a top tape.

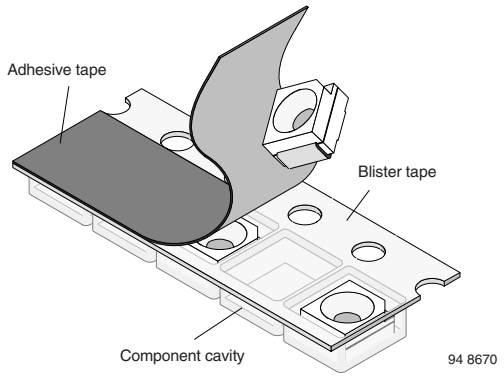

TAPING OF VLM.3...

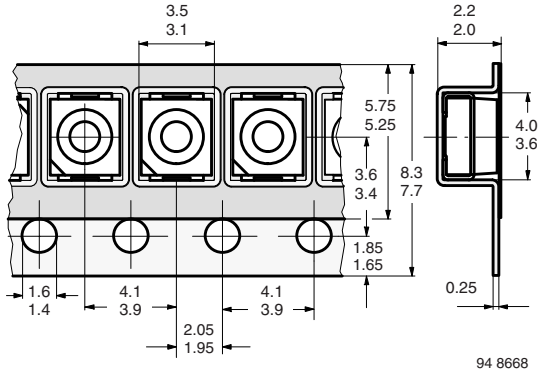

Fig. 8 - Tape Dimensions in mm for PLCC-2

REEL PACKAGE DIMENSION IN MILLIMETERS FOR SMD LEDS, TAPE OPTION GS08 (= 1500 PCS.)

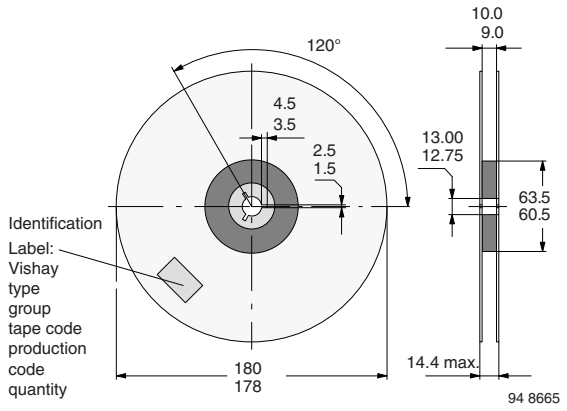

Fig. 9 - Reel Dimensions - GS08

REEL PACKAGE DIMENSION IN MILLIMETERS FOR SMD LEDS, TAPE OPTION GS18 (= 8000 PCS.) PREFERRED

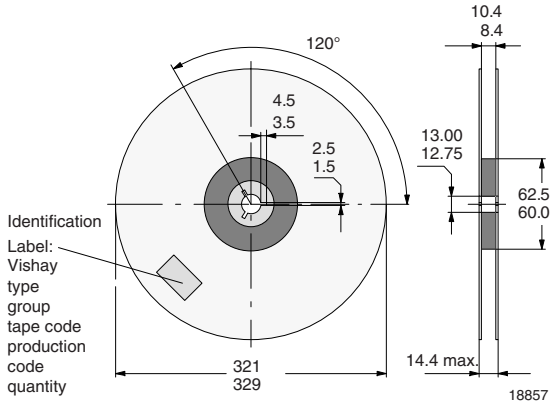

Fig. 10 - Reel Dimensions - GS18

SOLDERING PROFILE

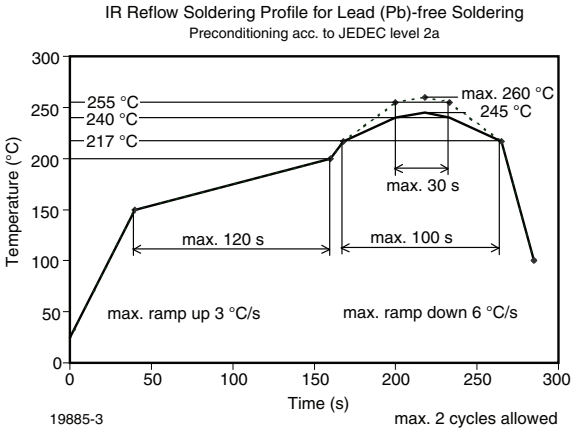

Fig. 11 - Vishay Lead (Pb)-free Reflow Soldering Profile (according to J-STD-020)

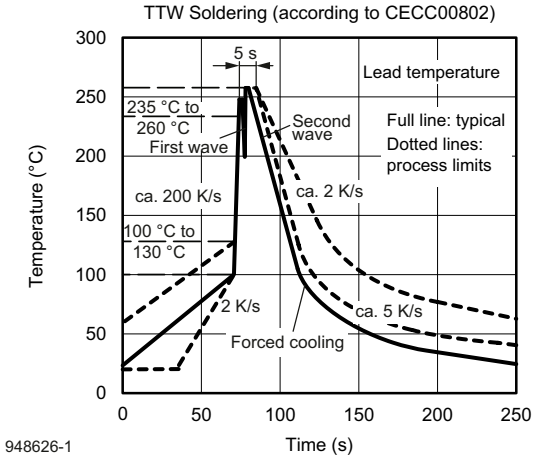

Fig. 12 - Double Wave Soldering of Opto Devices (all packages)

For technical questions, contact: LED@vishay.com
THIS DOCUMENT IS SUBJECT TO CHANGE WITHOUT NOTICE. THE PRODUCTS DESCRIBED HEREIN AND THIS DOCUMENT ARE SUBJECT TO SPECIFIC DISCLAIMERS, SET FORTH AT www.vishay.com/doc?91000

BAR CODE PRODUCT LABEL (example)

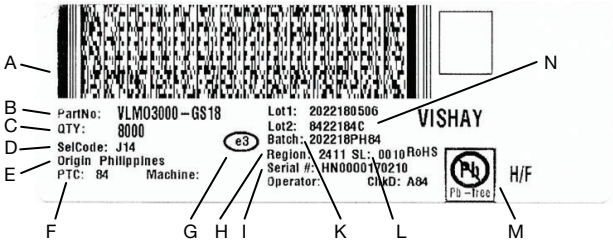

A. 2D barcode
B. Part No: Vishay part number
C. QTY: quantity
D. SelCode: selection bin code
E. Country of origin
F. PTC: production plant code
G. Termination finish
H. Region code
I. Serial#: serial number
K. Batch number: year, week, country code, plant code
L. SL: storage location
M. Environmental symbols: RoHS, lead (Pb)-free, halogen-free
N. Lot numbers

For technical questions, contact: LED@vishay.com
THIS DOCUMENT IS SUBJECT TO CHANGE WITHOUT NOTICE. THE PRODUCTS DESCRIBED HEREIN AND THIS DOCUMENT ARE SUBJECT TO SPECIFIC DISCLAIMERS, SET FORTH AT www.vishay.com/doc?91000

Disclaimer

ALL PRODUCT, PRODUCT SPECIFICATIONS AND DATA ARE SUBJECT TO CHANGE WITHOUT NOTICE TO IMPROVE RELIABILITY, FUNCTION OR DESIGN OR OTHERWISE.

Vishay Intertechnology, Inc., its affiliates, agents, and employees, and all persons acting on its or their behalf (collectively, “Vishay”), disclaim any and all liability for any errors, inaccuracies or incompleteness contained in any datasheet or in any other disclosure relating to any product.

Vishay makes no warranty, representation or guarantee regarding the suitability of the products for any particular purpose or the continuing production of any product. To the maximum extent permitted by applicable law, Vishay disclaims (i) any and all liability arising out of the application or use of any product, (ii) any and all liability, including without limitation special, consequential or incidental damages, and (iii) any and all implied warranties, including warranties of fitness for particular purpose, non-infringement and merchantability.

Statements regarding the suitability of products for certain types of applications are based on Vishay's knowledge of typical requirements that are often placed on Vishay products in generic applications. Such statements are not binding statements about the suitability of products for a particular application. It is the customer's responsibility to validate that a particular product with the properties described in the product specification is suitable for use in a particular application. Parameters provided in datasheets and / or specifications may vary in different applications and performance may vary over time. All operating parameters, including typical parameters, must be validated for each customer application by the customer's technical experts. Product specifications do not expand or otherwise modify Vishay's terms and conditions of purchase, including but not limited to the warranty expressed therein.

Hyperlinks included in this datasheet may direct users to third-party websites. These links are provided as a convenience and for informational purposes only. Inclusion of these hyperlinks does not constitute an endorsement or an approval by Vishay of any of the products, services or opinions of the corporation, organization or individual associated with the third-party website. Vishay disclaims any and all liability and bears no responsibility for the accuracy, legality or content of the third-party website or for that of subsequent links.

Except as expressly indicated in writing, Vishay products are not designed for use in medical, life-saving, or life-sustaining applications or for any other application in which the failure of the Vishay product could result in personal injury or death. Customers using or selling Vishay products not expressly indicated for use in such applications do so at their own risk. Please contact authorized Vishay personnel to obtain written terms and conditions regarding products designed for such applications.

No license, express or implied, by estoppel or otherwise, to any intellectual property rights is granted by this document or by any conduct of Vishay. Product names and markings noted herein may be trademarks of their respective owners.

© 2024 VISHAY INTERTECHNOLOGY, INC. ALL RIGHTS RESERVED