SIEMENS

Data sheet 3RV2917-5FA00

Terminal block Device infeed

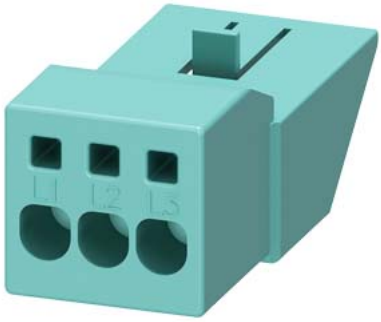

product brand name	SIRIUS
product category	Plugs, adapters and terminals
product designation	Terminal block
design of the product	for power outlet
General technical data	
size of the circuit-breaker	S00, S0
power loss [W] for rated value of the current at AC in hot operating state per pole	1.27 W
type of calculation of power loss depending on pole	quadratic
insulation voltage with degree of pollution 3 at AC rated value	500 V
thermal current	32 A
Substance Prohibitance (Date)	03/01/2017
number of poles for main current circuit	3
operating voltage at AC rated value	500 V
operational current rated value	32 A
ampacity maximum	32 A
UL/CSA ratings	
operating voltage at AC according to UL rated value	600 V
Ambient conditions	
ambient temperature	
● during operation	-20 ... +60 °C
● during storage	-50 ... +80 °C
Environmental footprint	
Environmental Product Declaration(EPD)	Yes
Global Warming Potential [CO2 eq] total	9.06 kg
Global Warming Potential [CO2 eq] during manufacturing	0.313 kg
Global Warming Potential [CO2 eq] during operation	8.72 kg
Global Warming Potential [CO2 eq] after end of life	0.022 kg
Electrical Safety	
protection class IP on the front according to IEC 60529	IP20
touch protection on the front according to IEC 60529	finger-safe, for vertical contact from the front
Installation/ mounting/ dimensions	
height	25 mm
width	26 mm
depth	60 mm
Connections/ Terminals	
type of electrical connection for main current circuit	spring-loaded terminals
type of connectable conductor cross-sections	
● for main contacts	
— solid	1x (1 ... 10 mm²)

Subject to change without notice
© Copyright Siemens

— stranded	1x (1 ... 10 mm²)
— finely stranded with core end processing	1x (1 ... 6 mm²)
● for AWG cables for main contacts	1x (18 ... 8)
connectable conductor cross-section for main contacts	
● solid or stranded	1 ... 10 mm²
● stranded	1 ... 10 mm²
● finely stranded with core end processing	1 ... 6 mm²
AWG number as coded connectable conductor cross section for main contacts	18 ... 8

Approvals Certificates

General Product Approval

Confirmation

Test Certificates

Type Test Certific-ates/Test Report

Marine / Shipping

other

Miscellaneous

Confirmation

Environment

Environmental Con-firmations

Further information

Information on the packaging
https://support.industry.siemens.com/cs/ww/en/view/109813875
Information- and Downloadcenter (Catalogs, Brochures,…)
https://www.siemens.com/ic10
Industry Mall (Online ordering system)
https://mall.industry.siemens.com/mall/en/en/Catalog/product?mlfb=3RV2917-5FA00
Cax online generator
http://support.automation.siemens.com/WW/CAXorder/default.aspx?lang=en&mlfb=3RV2917-5FA00
Service&Support (Manuals, Certificates, Characteristics, FAQs,...)
https://support.industry.siemens.com/cs/ww/en/ps/3RV2917-5FA00
Image database (product images, 2D dimension drawings, 3D models, device circuit diagrams, EPLAN macros, ...)
http://www.automation.siemens.com/bilddb/cax_de.aspx?mlfb=3RV2917-5FA00&lang=en

© Copyright Siemens

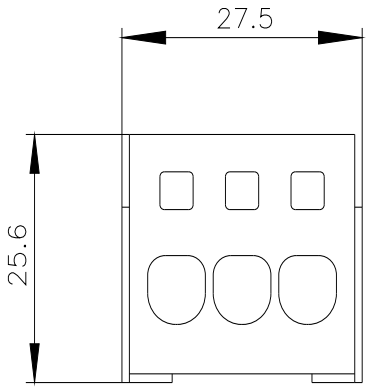

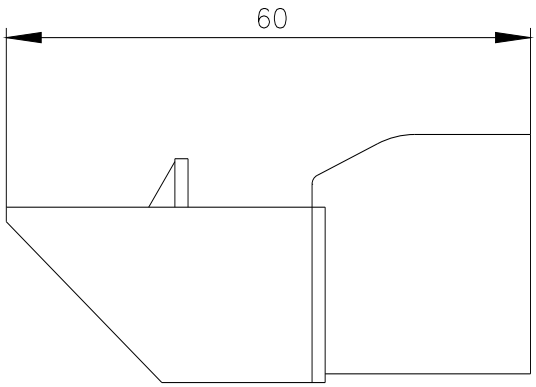

last modified: 1/10/2024

Subject to change without notice
© Copyright Siemens