Remote Power – Dual Port, NJ Package
10/100BASE-TX Magnetic Modules

HALO Electronics offers a complete family of dual port, "Remote Power", solutions. Available in both commercial and industrial temperature ranges. Designed to meet the requirements of IEEE802.3af with 350 mA current capability.



RoHS COMPLIANT

NJ Package

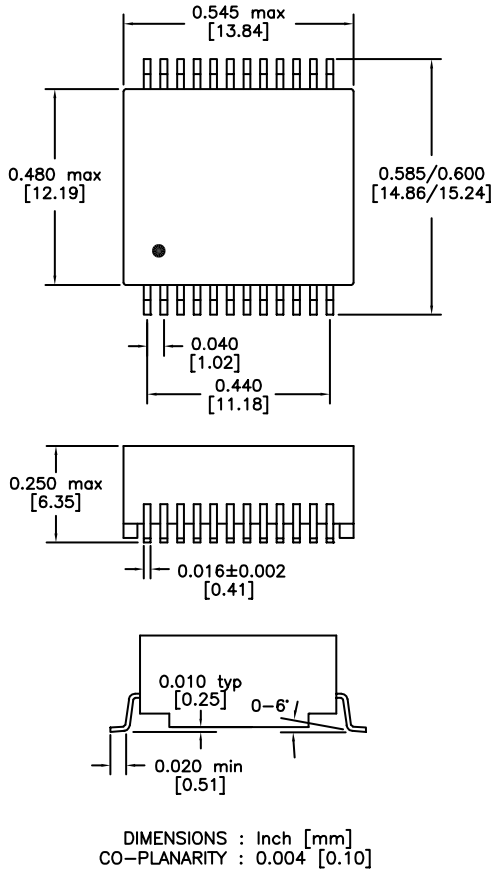

DIMENSIONS : Inch [mm]
CO–PLANARITY : 0.004 [0.10]

Patented Construction
US Pat Nbrs: 5,656,985 6,297,721 B1
6,297,720 B1 6,320,489 B1
6,344,785 B1 6,662,431 B1

Circuit Diagram A

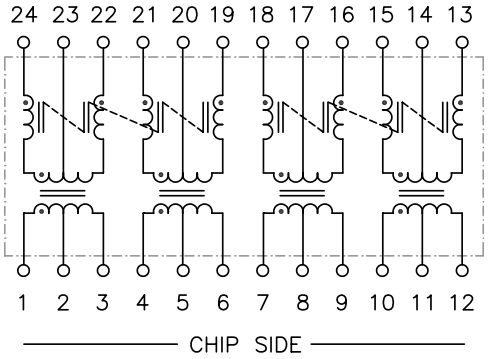

Circuit Diagram B

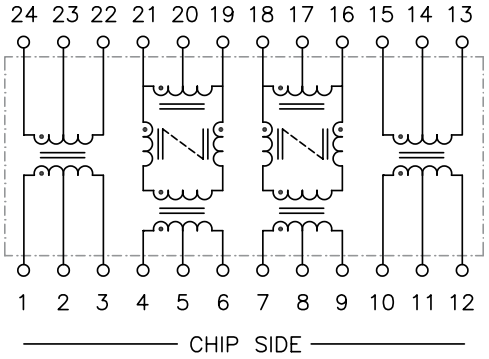

Electrical Specifications @ 25°C

Isolation Voltage:	1,500Vrms
Turns Ratio, TX & RX:	1CT:1CT
Insertion Loss (0.1-100MHz):	-1.1dB max
OCL @100KHz, 8mA:	350μH min
(over full temp. range)	

Return Loss

0.5-30MHz:	-18dB min
40MHz:	-15.5dB min
50MHz:	-13.6dB min
60-80MHz:	-12dB min

Part Number	Temp Range	PRI/SEC Cw/w (pF typ)	PRI DCR (Ω max)	CMR (.1-100MHz)	Crosstalk (1-100MHz)	Circuit Diagram
TG110-RP06NJRL	0 to 70C	25	0.9	-38dB typ	-38dB typ	A
TG110-RP07NJRL	0 to 70C	25	0.9	-40dB typ*	-40dB typ	B
TG110-RPE12NJRL	-40 to +85C	25	1.0	-38dB typ	-38dB typ	A

*TX only

Remote Power – Dual Port, NY Package
10/100BASE-TX Magnetic Modules



HALO Electronics offers a complete family of dual port, "Remote Power", solutions. Available in both commercial and industrial temperature ranges. Designed to meet the requirements of IEEE802.3af with 350 mA current capability.

RoHS COMPLIANT

NY Package

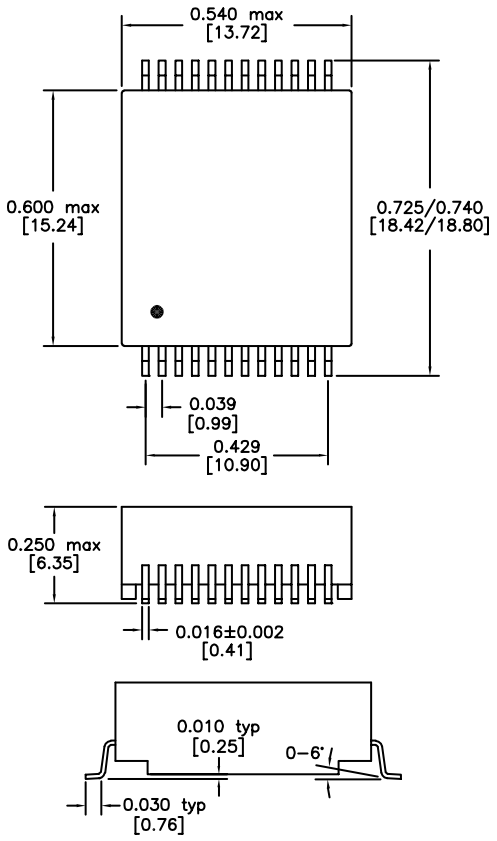

DIMENSIONS : Inch [mm]
CO–PLANARITY : 0.004 [0.10]

Patented Construction
US Pat Nbrs: 5,656,985 6,297,721 B1
6,297,720 B1 6,320,489 B1
6,344,785 B1 6,662,431 B1

Circuit Diagram A

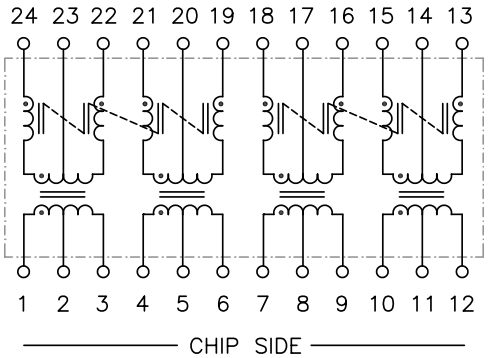

Circuit Diagram B

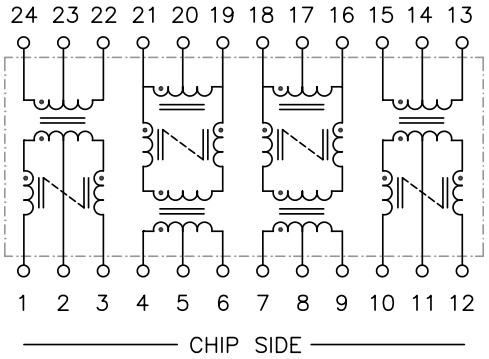

Electrical Specifications @ 25°C

Isolation Voltage:	1,500Vrms
Turns Ratio, TX & RX:	1CT:1CT
Insertion Loss (0.1-100MHz):	-1.1dB max
OCL @100KHz, 8mA:	350μH min
(over full temp. range)	

Return Loss

0.5-30MHz:	-18dB min
40MHz:	-15.5dB min
50MHz:	-13.6dB min
60-80MHz:	-12dB min

Part Number	Temp Range	PRI/SEC Cw/w (pF typ)	PRI DCR (Ω max)	CMR (.1-100MHz)	Crosstalk (1-100MHz)	Circuit Diagram
TG110-RP05NYRL	0 to 70C	25	0.9	-40dB typ	-40dB typ	B
TG110-RP10NYRL	0 to 70C	25	0.9	-38dB typ	-38dB typ	A
TG110-RPE10NYRL	-40 to +85C	25	1.0	-38dB typ	-38dB typ	A

Remote Power – Dual Port, NZ Package
10/100BASE-TX Magnetic Modules



HALO Electronics offers a complete family of dual port, "Remote Power", solutions. Available in both commercial and industrial temperature ranges. Designed to meet the requirements of IEEE802.3af with 350 mA current capability. Auto-MDIX compatible. Standard devices are available for most leading silicon vendors' Phy's.

RoHS COMPLIANT

NZ Package

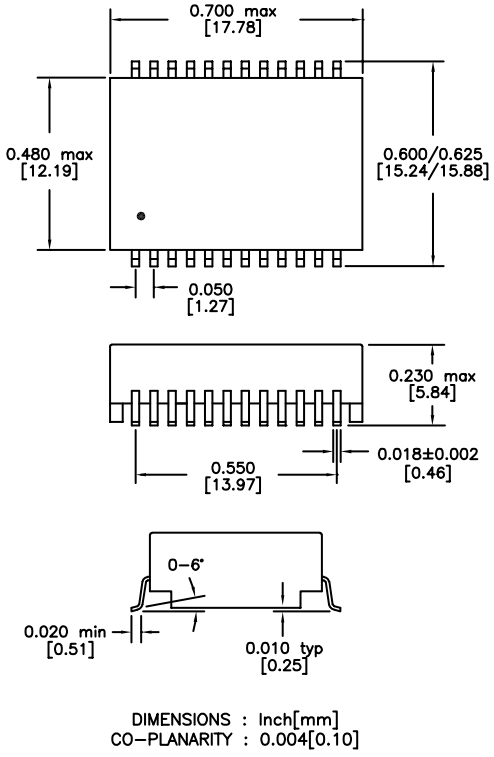

DIMENSIONS : Inch[mm]
CO–PLANARITY : 0.004[0.10]

Circuit Diagram A

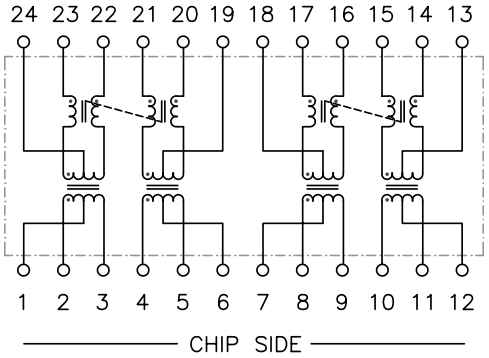

Circuit Diagram B

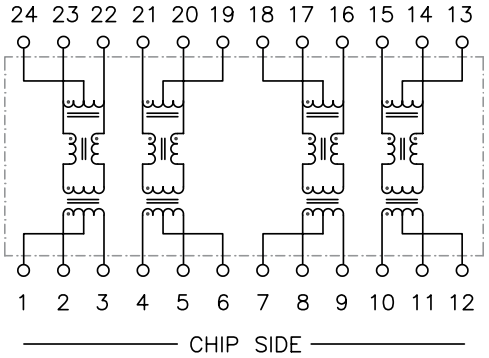

Patented Construction
US Pat Nbrs: 5,656,985 6,297,721 B1
6,297,720 B1 6,320,489 B1
6,344,785 B1 6,662,431 B1

Electrical Specifications @ 25°C

Isolation Voltage:	1,500Vrms
Turns Ratio, TX & RX:	1CT:1CT
Insertion Loss (0.1-100MHz):	-1.1dB max
OCL @100KHz, 8mA:	350μH min
(over full temp. range)	

Return Loss

0.5-30MHz:	-18dB min
40MHz:	-15.5dB min
50MHz:	-13.6dB min
60-80MHz:	-12dB min

Part Number	Temp Range	PRI/SEC Cw/w (pF typ)	PRI DCR (Ω max)	CMR (.1-100MHz)	Crosstalk (1-100MHz)	Circuit Diagram
TG110-RP01NZRL	0 to 70C	25	0.9	-38dB typ	-38dB typ	A
TG110-RP03NZRL	0 to 70C	25	0.9	-40dB typ	-40dB typ	B
TG110-RPE9NZRL	-40 to +85C	25	1.0	-38dB typ	-38dB typ	A