SERIES: RCJ-21 | DESCRIPTION: RCA JACK

FEATURES

- through hole
- mounting tab
- 2 ports



RoHS

PART NUMBER KEY

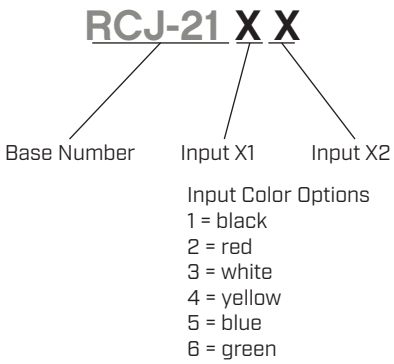

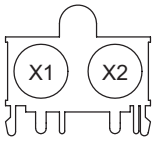

Example part number: **RCJ-2121**

input 1 = red
input 2 = black

SPECIFICATIONS

parameter	conditions/description	min	typ	max	units
contact resistance				30	mΩ
insulation resistance	at 500 Vdc	100			MΩ
voltage withstand	for 1 minute			500	Vac
operating temperature		-25		70	°C
life			5,000		cycles
flammability rating	UL94V-0				
RoHS	yes				

MECHANICAL DRAWING

units: mm[inches]

TOLERANCE:
±0.3mm (unless otherwise specified)

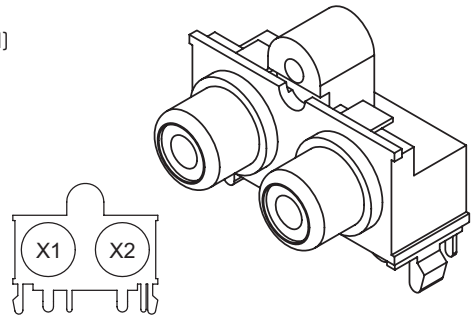

	MATERIAL	PLATING
barrel terminal (1, 3)	bronze	nickel
center terminal (2, 4)	bronze	tin
insulator (X1, X2)	PBT	
housing	ABS	

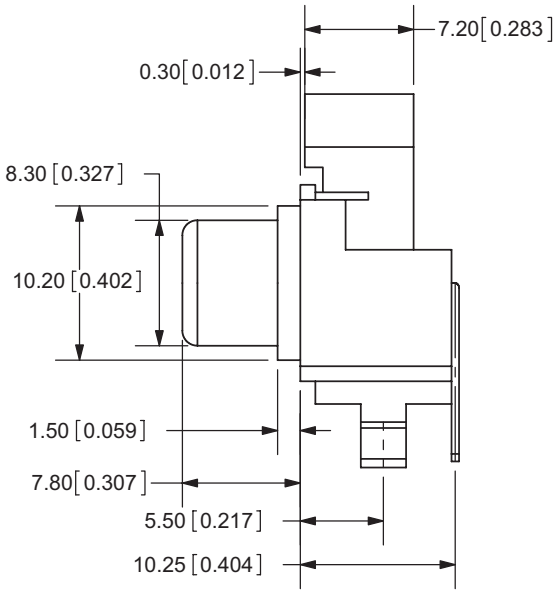

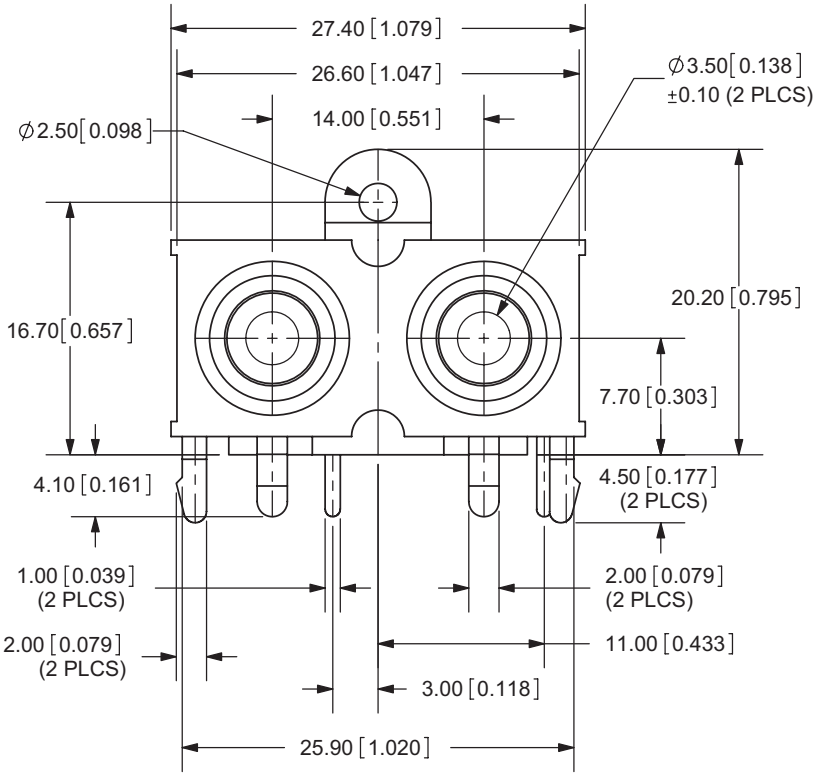

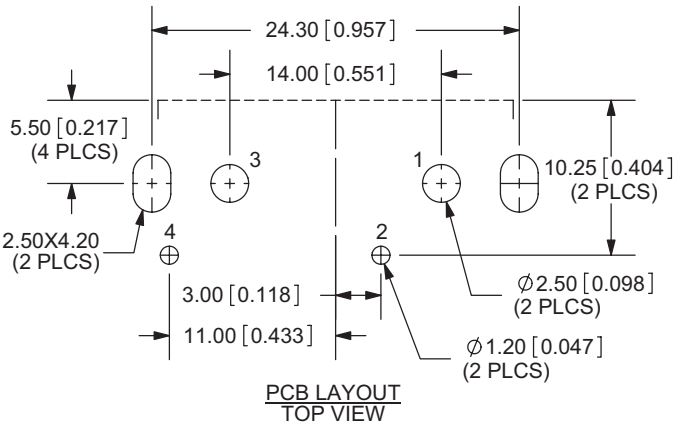

PCB LAYOUT
TOP VIEW

Model No.	RCJ-21XX
Schematic	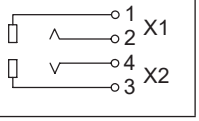

REVISION HISTORY

rev.	description	date
1.0	initial release	06/13/2007
1.01	new template applied	06/07/2012
1.02	brand update	06/11/2020
1.03	logo, datasheet style update	11/22/2022

The revision history provided is for informational purposes only and is believed to be accurate.

CUI Devices offers a one (1) year limited warranty. Complete warranty information is listed on our website.

CUI Devices reserves the right to make changes to the product at any time without notice. Information provided by CUI Devices is believed to be accurate and reliable. However, no responsibility is assumed by CUI Devices for its use, nor for any infringements of patents or other rights of third parties which may result from its use.

CUI Devices products are not authorized or warranted for use as critical components in equipment that requires an extremely high level of reliability. A critical component is any component of a life support device or system whose failure to perform can be reasonably expected to cause the failure of the life support device or system, or to affect its safety or effectiveness.

cuidevices.com