Product data sheet

Specifications



Limit switch, Limit switches XC Standard, XCKP, cat's whisker, 1NC+1 NO, snap, M12

XCKP2106M12

Main

Range of product	Telemecanique Limit switches XC Standard
Series name	Standard format
product or component type	Limit switch
Device short name	XCKP
Sensor design	Compact
Body type	Fixed
Head type	Multi-directional head
Material	Plastic
body material	Plastic
Head material	Zamak
Fixing mode	By the body
Movement of operating head	Multi-directional
Type of operator	Spring return cat"s whisker
Type of approach	Multi-directional approach
Number of poles	2
Contacts type and composition	1 NC + 1 NO
Contact operation	Snap action

Complementary

Switch actuation	By any moving part
Electrical connection	Male connector M12, 4 pins
Contacts insulation form	Zb
Positive opening	Without
Minimum torque for tripping	13 N.m
Maximum actuation speed	1 m/s
[Ie] rated operational current	3 A at 240 V, AC-15 conforming to IEC 60947-5-1 appendix A 0.27 A at 250 V, DC-13 conforming to IEC 60947-5-1 appendix A
[Ithe] conventional enclosed thermal current	3 A
[Ui] rated insulation voltage	300 V conforming to UL 508 300 V conforming to CSA C22.2 No 14 250 V (pollution degree 3) conforming to IEC 60947-1
Maximum resistance across terminals	25 MOhm conforming to IEC 60255-7 category 3

Disclaimer: This documentation is not intended as a substitute for and is not to be used for determining suitability or reliability of these products for specific user applications

[Uimp] rated impulse withstand voltage	2.5 kV conforming to IEC 60664 2.5 kV conforming to IEC 60947-1
Short-circuit protection	4 A cartridge fuse, type gG
Electrical durability	5000000 cycles, DC-13, 120 V, 4 W, operating rate <60 cyc/mn, load factor: 0.5 conforming to IEC 60947-5-1 appendix C 5000000 cycles, DC-13, 24 V, 10 W, operating rate <60 cyc/mn, load factor: 0.5 conforming to IEC 60947-5-1 appendix C 5000000 cycles, DC-13, 48 V, 7 W, operating rate <60 cyc/mn, load factor: 0.5 conforming to IEC 60947-5-1 appendix C
Mechanical durability	5000000 cycles
Width	31 mm
Height	65 mm
Depth	30 mm
Terminals description ISO n°1	(21-22)NC (13-14)NO

Environment

Shock resistance	50 gn for 11 ms conforming to IEC 60068-2-27
Vibration resistance	25 gn (f= 10…500 Hz) conforming to IEC 60068-2-6
IP degree of protection	IP66 conforming to IEC 60529 IP67 conforming to IEC 60529
IK degree of protection	IK04 conforming to IEC 62262
Electrical shock protection class	Class II conforming to IEC 61140 Class II conforming to NF C 20-030
Ambient air temperature for operation	-25…70 °C
Ambient air temperature for storage	-40…70 °C
protective treatment	TC
Product certifications	CSA CCC UL
Standards	IEC 60204-1 IEC 60204-1 IEC 60947-5-1 CSA C22.2 No 14 IEC 60947-5-1 UL 508

Packing Units

Unit Type of Package 1	PCE
Number of Units in Package 1	1
Package 1 Height	3.5 cm
Package 1 Width	3.5 cm
Package 1 Length	21.5 cm
Package 1 Weight	89.0 g
Unit Type of Package 2	S02
Number of Units in Package 2	22
Package 2 Height	15.0 cm
Package 2 Width	30.0 cm
Package 2 Length	40.0 cm

Package 2 Weight	2.309 kg

Contractual warranty

Warranty	18 months

Sustainability

Green Premium^{TM} label is Schneider Electric's commitment to delivering products with best-in-class environmental performance. Green Premium promises compliance with the latest regulations, transparency on environmental impacts, as well as circular and low-CO_2 products.

Guide to assessing product sustainability is a white paper that clarifies global eco-label standards and how to interpret environmental declarations.

Learn more about Green Premium >

Guide to assess a product's sustainability >



RoHS/REACh

Well-being performance

Mercury Free	
Rohs Exemption Information	Yes

Certifications & Standards

Reach Regulation	REACh Declaration
Eu Rohs Directive	Pro-active compliance (Product out of EU RoHS legal scope)
California Proposition 65	WARNING: This product can expose you to chemicals including: Diisononyl phthalate (DINP), which is known to the State of California to cause cancer, and Di-isodecyl phthalate (DIDP), which is known to the State of California to cause birth defects or other reproductive harm. For more information go to www.P65Warnings.ca.gov

Dimensions Drawings

Dimensions

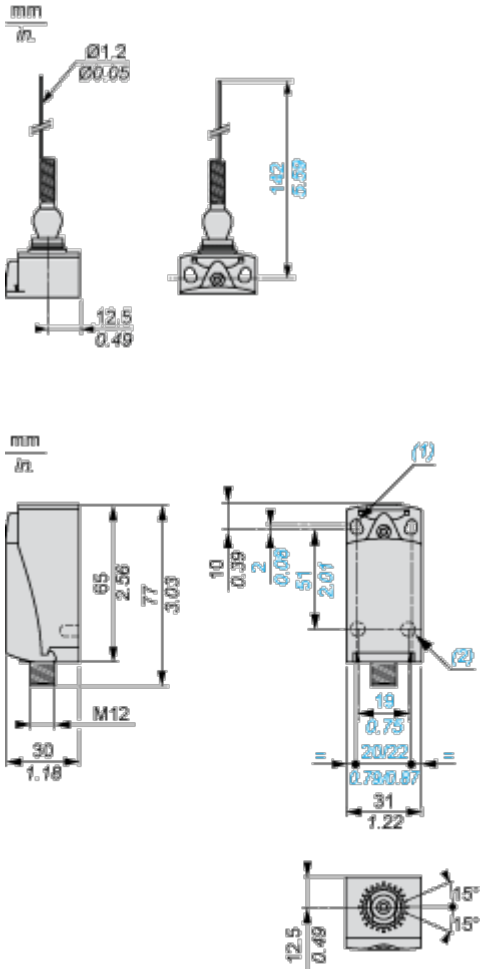

(1) 2 elongated holes Ø 4.3 x 6.3 mm on 22 mm centres, 2 holes Ø 4.3 on 20 mm centres.

(2) 2 x Ø 3 holes for support studs, depth 4 mm.

Mounting and Clearance

Mounting with Cable Entry

Position of Cable Gland

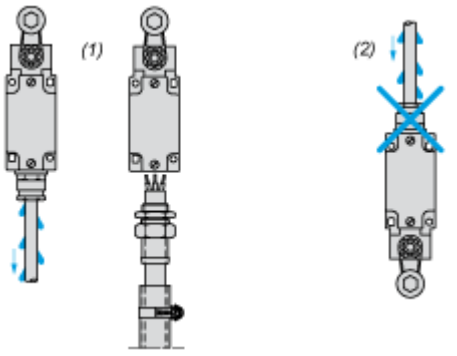

(1) Recommended

(2) To be avoided

Setting-up

Plunger or Multi-directional Heads

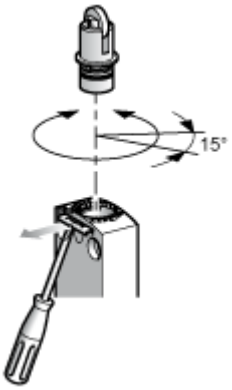

Connections and Schema

Wiring Diagram

2-pole NC + NO Snap Action

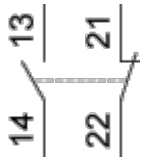

Connections

M12 Connector



1-2 : NC

3-4 : NO

Technical Description

Characteristics of Actuation

Switch Actuation by Any Moving Part

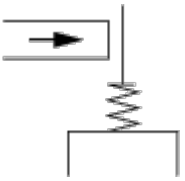

Functionnal Diagram

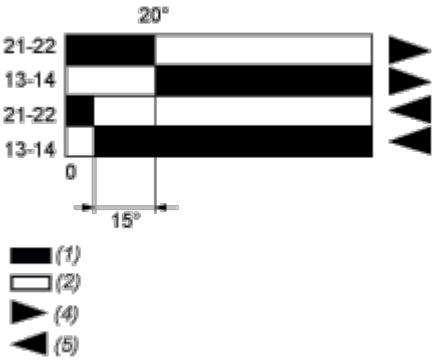

(1) Closed

(2) Open

(4) Tripping

(5) Resetting