R10-R2X2-V185

TE Internal #: 1393769-2

TE Internal Description: R10-R2X2-V185=R10

View on TE.com >



Product Compliance

For compliance documentation, visit the product page on TE.com>

EU RoHS Directive 2011/65/EU	Compliant with Exemptions
EU ELV Directive 2000/53/EC	Not Yet Reviewed
China RoHS 2 Directive MIIT Order No 32, 2016	Restricted Materials Above Threshold
EU REACH Regulation (EC) No. 1907/2006	Current ECHA Candidate List: JUNE 2025 (250) Candidate List Declared Against: JAN 2025 (247) SVHC > Threshold: Cadmium oxide (9.9% in M-3316-1) **Article Safe Usage Statements:** Use personal protective equipment as required. Do not eat, drink or smoke when using this product. Recycle if possible and dispose of the article by following all applicable governmental regulations relevant to your geographic location.
Halogen Content	Not Yet Reviewed for halogen content
Solder Process Capability	Wave solder capable to 260°C

Product Compliance Disclaimer

This information is provided based on reasonable inquiry of our suppliers and represents our current actual knowledge based on the information they provided. This information is subject to change. The part numbers that TE has identified as EU RoHS compliant have a maximum concentration of 0.1% by weight in homogenous materials for lead, hexavalent chromium, mercury, PBB, PBDE, DBP, BBP, DEHP, DIBP, and 0.01% for cadmium, or qualify for an exemption to these limits as defined in the Annexes of Directive 2011/65/EU (RoHS2). Finished electrical and electronic equipment products will be CE marked as required by Directive 2011/65/EU. Components may not be CE marked. Additionally, the part numbers that TE has identified as EU ELV compliant have a maximum concentration of 0.1% by weight in homogenous materials for lead, hexavalent chromium, and mercury, and 0.01% for cadmium, or qualify for an exemption to these limits as defined in the Annexes of Directive 2000/53/EC (ELV). Regarding the REACH Regulation, the information TE provides on SVHC in articles for this part number is based on the latest European Chemicals Agency (ECHA) 'Guidance on requirements for substances in articles' posted at this URL: https://echa.europa.eu/guidance-documents/guidance-on-reach

Compatible Parts



TE Part # 1-1393767-1
R10-E2X2-V185=R10

Customers Also Bought



TE Part #CAT-D48-ST273
DEUTSCH Solid Contacts



TE Part #DT06-2S
PLG, 2P, GRY, N



TE Part #DT04-2P
REC, 2P, GRY, N



TE Part #CAT-D487-W416
Wedgelocks: DEUTSCH DT



TE Part #114017-ZZ
SEALING PLUG, SIZE 12/16, WHT

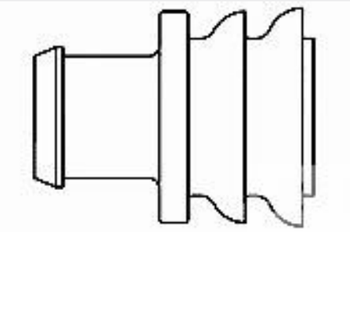

TE Part #281934-2
SINGLE WIRE SEAL



TE Part #CAT-AM71-CH8172
AMP SUPERSEAL 1.5MM, CONNECTOR HOUSING

Documents

CAD Files

3D PDF

3D

Customer View Model
ENG_CVM_CVM_1393769-2_99.2d_dxf.zip

English

Customer View Model
ENG_CVM_CVM_1393769-2_99.3d_igs.zip

English

Customer View Model
ENG_CVM_CVM_1393769-2_99.3d_stp.zip

English

By downloading the CAD file I accept and agree to the Terms and Conditions of use.

Datasheets & Catalog Pages

R10 General Purpose Dry Circuit to 7.5 Amp Multicontact AC or DC Relay

English

Product Specifications

Definitions General Purpose Relays

English

Agency Approvals

CSA Certificate

English