Toroid & Balun Cores

MASTER CATALOG



Laird™

www.laird.com

ABOUT **LAIRD TECHNOLOGIES**

Laird Technologies designs and manufactures customized, performance-critical products for wireless and other advanced electronics applications.

The company is a global market leader in the design and supply of electromagnetic interference (EMI) shielding, thermal management products, mechanical actuation systems, signal integrity components, and wireless antennae solutions, as well as radio frequency (RF) modules and systems.

Laird Technologies is the world leader in the design and manufacture of customized, performance-critical products for wireless and other advanced electronics applications. Laird Technologies partners with its customers to customize product solutions for applications in many industries including:

Laird Technologies offers its customers unique product solutions, dedication to research and development, as well as a seamless network of manufacturing and customer support facilities across the globe.

Laird™

MATERIAL 25
COMMON MODE HIGH FREQUENCY

125 PERMEABILITY

Initial Permeability vs. Temperature

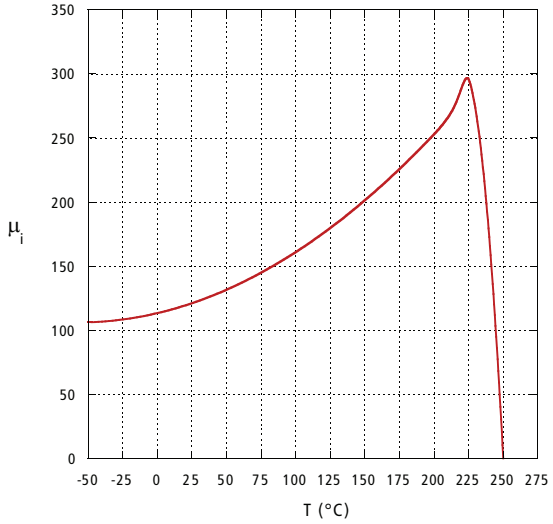

Permeability vs. Frequency

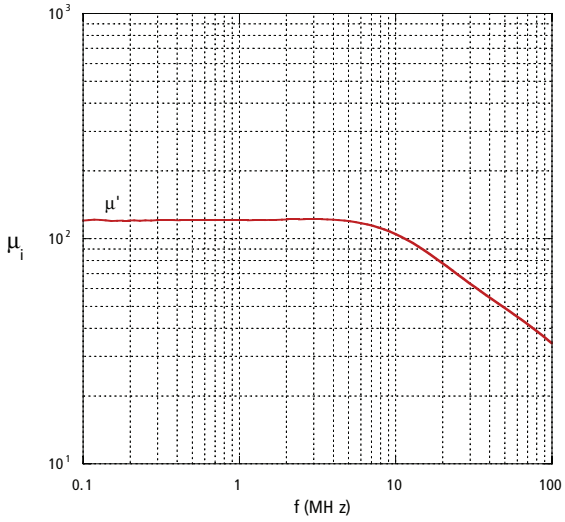

Comparing Turns - 25T0155-10P

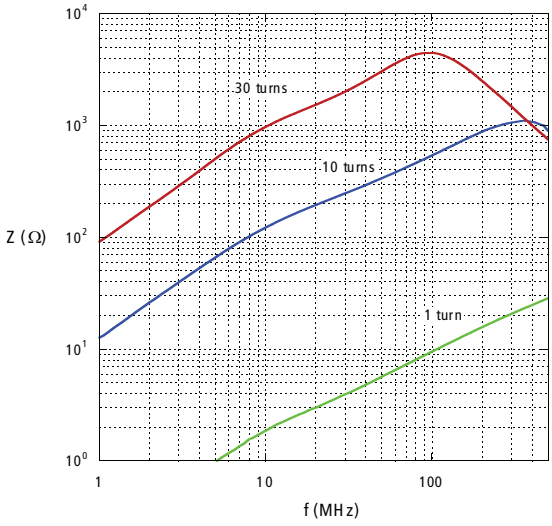

Saturation Flux Denasity vs. Temperature

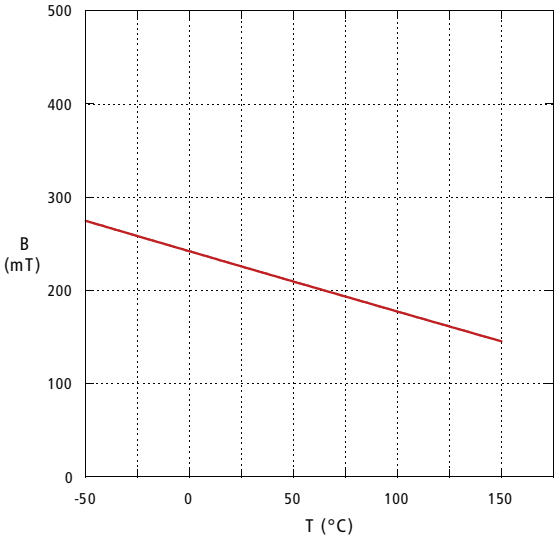

DC BIAS MATERIALS 36, 46, 66

TYPICAL VALUES			DC BIAS MATERIALS		
PARAMETER	SYMBOL	UNIT	36 DC Bias Standard Temp	46 DC Bias Extended Temp	66 High DC Bias Extended Temp
Relative Initial Permeability	μi		4500	4000	3200
A_L Tolerance		%	± 25	± 25	± 25
Saturation Flux Density	B_S	Gauss	4500	4500	4800
		mT	450	450	480
at Field Intensity	*H*	Oersteds	10	10	10
		A/m	800	800	800
Residual Flux Density	B_r	Gauss	1000	1000	1300
		mT	100	100	130
Coercive Force	H_C	Oersteds	0.10	0.10	0.125
		A/m	8	8	10
Relative Loss Factor at Frequency	tan d m i f	10^{-6} MHz	10 0.10	10 0.10	2 0.10
Curie Temperature	T_C	°C	> 150	> 150	> 200
Resistivity	ρ	Ω-cm	10^2	10^2	500
Density		g/cm³	4.8	4.8	4.9

Minimum A_L Values (nH/T^2)	DC Bias Standard Temp Material 36			DC Bias Extended Temp Material 46		
	A_L Target	A_L .35 Oe Bias Min		A_L Target	A_L .35 Oe Bias Min	
Part Numbers	25°C	25°C	0°C to 70°C	25°C	25°C	-40°C to 80°C
T0100-40	1188	1063	884	1056	1074	746
T0115-00	703	629	523	625	636	442
T0115-10	955	853	710	848	864	600
T0119-40	1501	1342	1117	1334	1358	943
T0120-80	739	661	550	657	668	464
T0122-30	988	883	735	878	894	621
T0135-10	912	815	679	811	825	573
T0153-60	818	731	608	727	740	514

MATERIAL 66

HIGH DC BIAS EXTENDED TEMPERATURE PoE/PoE+ APPLICATION (-40°C TO 85°C)

3,200 PERMEABILITY

Initial Permeability vs. Temperature

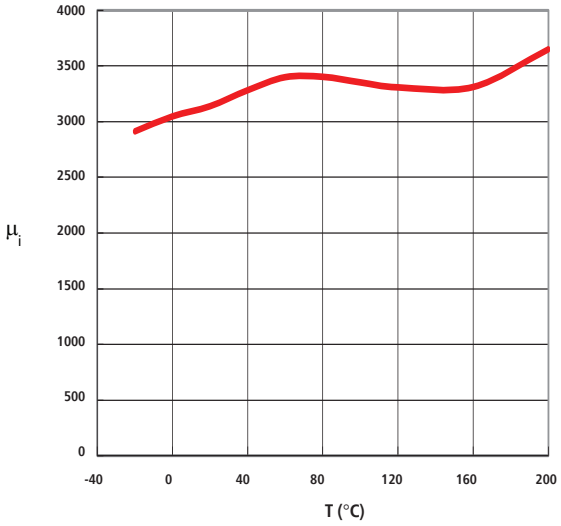

Permeability vs Frequency

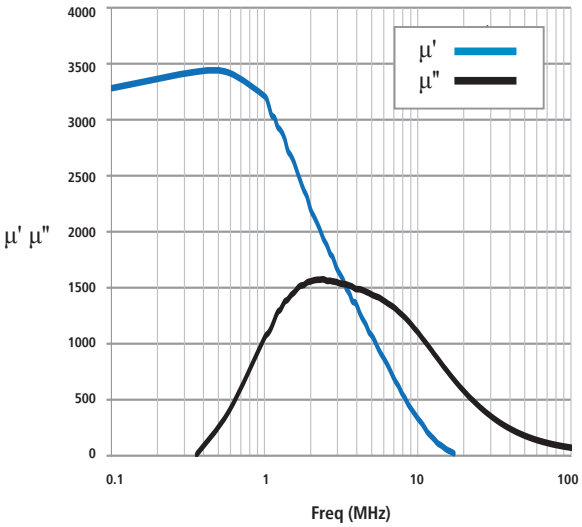

Incremental Permeability vs. Field Intensity

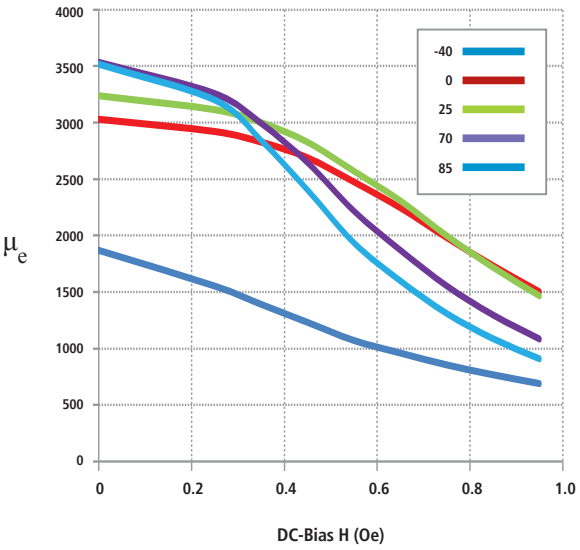

MATERIALS 36/46

MINIMUM INDUCTANCE WITH VARIOUS TURNS (8 mA DC BIAS)

Part	16 turns					18 turns				
	H (Oe)	36		46		H (Oe)	36		46	
		25 C	0-70 C	25 C	-40-85 C		25 C	0-70 C	25 C	-40-85 C
100-2	0.29	89	73	- -	- -	0.33	106	88	- -	- -
100-4	0.29	295	245	291	204	0.33	355	295	356	248
115-0	0.24	183	151	177	125	0.27	226	187	220	155
115-1	0.24	249	206	240	170	0.27	307	254	299	211
119-4	0.27	381	316	372	262	0.30	467	387	461	323
120-8	0.22	195	161	187	133	0.25	242	200	234	166
121-2	0.24	- -	- -	214	152	0.27	- -	- -	267	188
122-3	0.23	259	214	249	177	0.26	321	266	311	220
135-0	0.21	150	124	143	102	0.24	186	152	179	127
135-1	0.21	243	201	232	166	0.24	301	249	290	206
135-2	0.21	102	84	- -	- -	0.24	126	104	- -	- -
135-4	0.21	210	173	- -	- -	0.24	260	215	- -	- -
135-6	0.21	180	149	- -	- -	0.24	223	184	- -	- -
137-0	0.23	109	90	- -	- -	0.26	136	112	- -	- -
145-0	0.21	- -	- -	350	250	0.24	- -	- -	438	310
153-0	0.20	183	151	- -	- -	0.22	228	188	- -	- -
153-4	0.20	365	302	- -	- -	0.22	456	377	- -	- -

Part	20 turns					22 turns				
	H (Oe)	36		46		H (Oe)	36		46	
		25 C	0-70 C	25 C	-40-85 C		25 C	0-70 C	25 C	-40-85 C
100-2	0.36	125	105	- -	- -	0.40	140	117	- -	- -
100-4	0.36	418	348	427	295	0.40	466	389	493	338
115-0	0.30	270	224	267	187	0.33	314	261	315	219
115-1	0.30	367	304	362	253	0.33	426	354	428	297
119-4	0.34	546	453	551	382	0.37	628	524	646	445
120-8	0.28	290	240	284	200	0.31	339	281	337	235
121-2	0.30	- -	- -	323	226	0.33	- -	- -	381	265
122-3	0.29	384	318	378	265	0.32	447	371	446	311
135-0	0.26	226	187	219	155	0.29	265	219	260	183
135-1	0.26	366	303	355	251	0.29	429	355	422	296
135-2	0.26	154	127	- -	- -	0.29	180	149	- -	- -
135-4	0.26	316	262	- -	- -	0.29	370	307	- -	- -
135-6	0.26	271	224	- -	- -	0.29	318	263	- -	- -
137-0	0.29	162	134	- -	- -	0.32	189	157	- -	- -
145-0	0.27	- -	- -	532	375	0.29	- -	- -	636	446
153-0	0.25	275	228	- -	- -	0.27	327	271	- -	- -
153-4	0.25	551	455	- -	- -	0.27	655	542	- -	- -

Part	24 turns					26 turns				
	H (Oe)	36		46		H (Oe)	36		46	
		25 C	0-70 C	25 C	-40-85 C		25 C	0-70 C	25 C	-40-85 C
100-2	0.44	147	122	- -	- -	0.47	160	131	- -	- -
100-4	0.44	489	407	555	378	0.47	533	436	622	404
115-0	0.36	356	297	364	251	0.39	397	333	413	283
115-1	0.36	484	403	494	341	0.39	539	451	560	385
119-4	0.40	700	585	741	508	0.44	725	603	823	560
120-8	0.33	392	326	394	274	0.36	440	366	449	310
121-2	0.36	- -	- -	441	304	0.39	- -	- -	500	343
122-3	0.35	509	423	517	357	0.38	568	475	587	404
135-0	0.32	303	252	303	211	0.34	346	287	349	242
135-1	0.32	491	407	490	342	0.34	560	466	565	392
135-2	0.32	206	171	- -	- -	0.34	235	195	- -	- -
135-4	0.32	424	352	- -	- -	0.34	484	402	- -	- -
135-6	0.32	364	302	- -	- -	0.34	415	345	- -	- -
137-0	0.35	215	179	- -	- -	0.37	244	203	- -	- -
145-0	0.32	- -	- -	740	515	0.35	- -	- -	844	584
153-0	0.30	377	312	- -	- -	0.32	430	357	- -	- -
153-4	0.30	754	625	- -	- -	0.32	861	715	- -	- -

MATERIALS 36/46

MINIMUM INDUCTANCE WITH VARIOUS TURNS (8 mA DC BIAS)

Part	30 turns					28 turns				
	H (Oe)	36		46		H (Oe)	36		46	
		25 C	0-70 C	25 C	-40-85 C		25 C	0-70 C	25 C	-40-85 C
100-2	0.55	- -	- -	- -	- -	0.51	166	133	- -	- -
100-4	0.55	- -	- -	- -	- -	0.51	554	443	674	398
115-0	0.45	442	365	506	343	0.42	418	348	460	314
115-1	0.45	599	496	687	466	0.42	567	472	625	427
119-4	0.50	826	665	994	599	0.47	780	639	911	592
120-8	0.42	504	420	556	379	0.39	484	405	503	345
121-2	0.45	- -	- -	612	416	0.42	- -	- -	557	381
122-3	0.43	651	541	732	499	0.41	607	507	656	448
135-0	0.40	410	343	435	298	0.37	382	319	392	270
135-1	0.40	665	555	704	482	0.37	618	516	636	438
135-2	0.40	279	233	- -	- -	0.37	260	217	- -	- -
135-4	0.40	574	480	- -	- -	0.37	534	446	- -	- -
135-6	0.40	492	411	- -	- -	0.37	458	382	- -	- -
137-0	0.43	275	228	- -	- -	0.40	265	221	- -	- -
145-0	0.40	- -	- -	1062	727	0.37	- -	- -	959	661
153-0	0.37	530	443	- -	- -	0.35	478	397	- -	- -
153-4	0.37	1061	885	- -	- -	0.35	955	795	- -	- -

Part	32 turns					34 turns				
	H (Oe)	36		46		H (Oe)	36		46	
		25 C	0-70 C	25 C	-40-85 C		25 C	0-70 C	25 C	-40-85 C
100-2	0.58	- -	- -	- -	- -	0.62	- -	- -	- -	- -
100-4	0.58	- -	- -	- -	- -	0.62	- -	- -	- -	- -
115-0	0.48	465	379	549	348	0.51	483	386	588	348
115-1	0.48	631	514	744	472	0.51	656	525	798	472
119-4	0.54	- -	- -	1051	584	0.57	- -	- -	- -	- -
120-8	0.45	528	437	605	410	0.47	567	464	662	430
121-2	0.48	- -	- -	664	421	0.51	- -	- -	712	421
122-3	0.46	689	567	796	529	0.49	718	582	855	529
135-0	0.42	437	364	481	329	0.45	454	376	520	353
135-1	0.42	708	589	780	533	0.45	736	608	843	572
135-2	0.42	297	247	- -	- -	0.45	309	255	- -	- -
135-4	0.42	612	509	- -	- -	0.45	636	526	- -	- -
135-6	0.42	524	437	- -	- -	0.45	545	451	- -	- -
137-0	0.46	291	239	- -	- -	0.49	303	246	- -	- -
145-0	0.43	- -	- -	1160	790	0.45	- -	- -	1271	862
153-0	0.40	565	472	- -	- -	0.42	597	497	- -	- -
153-4	0.40	1130	944	- -	- -	0.42	1194	994	- -	- -

Part	36 turns					38 turns				
	H (Oe)	36		46		H (Oe)	36		46	
		25 C	0-70 C	25 C	-40-85 C		25 C	0-70 C	25 C	-40-85 C
100-2	0.65	- -	- -	- -	- -	0.69	- -	- -	- -	- -
100-4	0.65	- -	- -	- -	- -	0.69	- -	- -	- -	- -
115-0	0.54	- -	- -	623	346	0.57	- -	- -	- -	- -
115-1	0.54	- -	- -	846	470	0.57	- -	- -	- -	- -
119-4	0.60	- -	- -	- -	- -	0.64	- -	- -	- -	- -
120-8	0.50	586	472	705	425	0.53	- -	- -	744	423
121-2	0.55	- -	- -	740	402	0.58	- -	- -	- -	- -
122-3	0.52	739	587	909	527	0.55	- -	- -	956	520
135-0	0.47	484	396	565	367	0.50	497	400	598	360
135-1	0.47	784	642	915	595	0.50	805	648	969	584
135-2	0.47	329	270	- -	- -	0.50	338	272	- -	- -
135-4	0.47	678	555	- -	- -	0.50	696	560	- -	- -
135-6	0.47	581	476	- -	- -	0.50	597	480	- -	- -
137-0	0.52	312	248	- -	- -	0.55	- -	- -	- -	- -
145-0	0.48	- -	- -	1358	862	0.51	- -	- -	1436	849
153-0	0.45	616	510	- -	- -	0.47	653	534	- -	- -
153-4	0.45	1232	1019	- -	- -	0.47	1305	1069	- -	- -

MATERIALS 66
MINIMUM INDUCTANCE WITH VARIOUS TURNS

Part	20 turns (25°C)					
	16mA	18mA	20mA	24mA	30mA	32mA
66T0153-30P	466	443	421	369	287	--
66T0153-40P	397	378	359	314	244	--
66T0154-70P	423	399	378	325	--	--
66T0155-00P	296	285	271	246	202	189
66T0157-00P	281	267	254	229	184	170
66T0175-20P	353	343	329	303	253	238
66T0190-80P	469	457	440	404	346	325
66T0190-70P	702	684	659	606	518	487
66T0220-00P	481	473	464	440	394	379
66T0231-10P	433	427	419	403	365	352
66T0231-70P	610	602	590	567	513	496
66T0238-00P	499	492	482	463	419	405

Part	20 turns (0-70°C)					
	16mA	18mA	20mA	24mA	30mA	32mA
66T0153-30P	439	405	375	312	228	--
66T0153-40P	375	346	319	266	194	--
66T0154-70P	397	362	334	272	--	--
66T0155-00P	279	270	249	215	166	153
66T0157-00P	265	250	231	198	150	135
66T0175-20P	332	323	309	271	212	195
66T0190-80P	440	430	416	365	292	270
66T0190-70P	659	644	623	548	438	404
66T0220-00P	451	444	436	416	351	332
66T0231-10P	405	400	393	380	331	314
66T0231-70P	571	564	554	535	466	442
66T0238-00P	467	461	452	437	381	361

Part	20 turns (-40-+85°C)					
	16mA	18mA	20mA	24mA	30mA	32mA
66T0153-30P	231	215	204	181	152	--
66T0153-40P	197	183	174	154	129	--
66T0154-70P	209	193	183	161	--	--
66T0155-00P	150	142	132	119	102	97
66T0157-00P	141	132	123	111	94	89
66T0175-20P	182	173	163	147	125	120
66T0190-80P	245	232	219	196	170	162
66T0190-70P	366	348	328	294	254	242
66T0220-00P	259	249	239	219	191	184
66T0231-10P	236	227	219	203	177	170
66T0231-70P	333	320	308	286	249	240
66T0238-00P	272	262	251	233	203	196

Part	22 turns (25°C)					
	16mA	18mA	20mA	24mA	30mA	32mA
66T0153-30P	540	513	479	403	--	--
66T0153-40P	461	438	408	344	--	--
66T0154-70P	491	458	424	355	--	--
66T0155-00P	348	331	314	278	220	--
66T0157-00P	326	310	295	254	197	--
66T0175-20P	418	399	382	345	280	258
66T0190-80P	555	532	511	464	383	353
66T0190-70P	832	798	765	695	574	529
66T0220-00P	575	561	549	510	449	423
66T0231-10P	519	509	499	468	419	401
66T0231-70P	731	717	703	659	589	565
66T0238-00P	597	586	571	538	482	461

Part	22 turns (0-70°C)					
	16mA	18mA	20mA	24mA	30mA	32mA
66T0153-30P	497	460	416	332	--	--
66T0153-40P	423	392	354	283	--	--
66T0154-70P	449	404	363	288	--	--
66T0155-00P	328	306	283	237	176	--
66T0157-00P	306	283	261	213	155	--
66T0175-20P	394	374	350	301	229	207
66T0190-80P	523	503	472	407	316	286
66T0190-70P	783	754	707	610	473	428
66T0220-00P	539	527	518	472	389	359
66T0231-10P	486	478	469	439	369	348
66T0231-70P	684	673	661	619	520	490
66T0238-00P	559	550	537	505	425	400

Part	22 turns (-40-+85°C)					
	16mA	18mA	20mA	24mA	30mA	32mA
66T0153-30P	262	249	233	203	--	--
66T0153-40P	224	212	198	173	--	--
66T0154-70P	238	221	207	181	--	--
66T0155-00P	174	161	152	136	115	--
66T0157-00P	161	151	143	125	105	--
66T0175-20P	211	197	185	168	142	135
66T0190-80P	284	265	249	224	192	182
66T0190-70P	425	397	373	336	288	272
66T0220-00P	305	290	278	249	218	207
66T0231-10P	278	267	256	231	202	195
66T0231-70P	391	376	361	325	285	274
66T0238-00P	320	307	292	266	233	224

MATERIALS 66
MINIMUM INDUCTANCE WITH VARIOUS TURNS

Part	24 turns (25°C)					
	16mA	18mA	20mA	24mA	30mA	32mA
66T0153-30P	616	577	531	437	--	--
66T0153-40P	525	491	453	372	--	--
66T0154-70P	554	516	469	383	--	--
66T0155-00P	400	377	354	303	--	--
66T0157-00P	376	354	329	277	--	--
66T0175-20P	482	459	436	379	299	--
66T0190-80P	644	613	582	516	409	375
66T0190-70P	965	918	873	773	613	562
66T0220-00P	671	654	633	582	497	467
66T0231-10P	609	594	580	534	472	445
66T0231-70P	858	836	817	752	664	626
66T0238-00P	701	683	667	614	537	512

Part	24 turns (0-70°C)					
	16mA	18mA	20mA	24mA	30mA	32mA
66T0153-30P	554	502	449	352	--	--
66T0153-40P	473	428	383	300	--	--
66T0154-70P	494	446	392	306	--	--
66T0155-00P	374	341	310	252	--	--
66T0157-00P	345	315	284	227	--	--
66T0175-20P	456	422	390	320	238	--
66T0190-80P	608	569	526	442	329	297
66T0190-70P	910	853	788	662	493	444
66T0220-00P	630	616	599	526	420	388
66T0231-10P	571	558	547	489	408	376
66T0231-70P	804	786	770	688	574	529
66T0238-00P	657	642	629	562	462	433

Part	24 turns (-40-+85°C)					
	16mA	18mA	20mA	24mA	30mA	32mA
66T0153-30P	299	280	261	227	--	--
66T0153-40P	255	238	222	193	--	--
66T0154-70P	268	251	232	202	--	--
66T0155-00P	197	183	171	151	--	--
66T0157-00P	182	171	160	140	--	--
66T0175-20P	240	223	211	186	157	--
66T0190-80P	323	300	282	252	212	201
66T0190-70P	484	450	423	377	318	301
66T0220-00P	348	330	315	282	244	233
66T0231-10P	321	305	292	259	230	218
66T0231-70P	452	430	411	365	323	307
66T0238-00P	370	351	336	298	262	251

Part	26 turns (25°C)					
	16mA	18mA	20mA	24mA	30mA	32mA
66T0153-30P	692	631	571	--	--	--
66T0153-40P	590	538	487	--	--	--
66T0154-70P	620	564	509	--	--	--
66T0155-00P	451	424	392	328	--	--
66T0157-00P	422	395	360	295	--	--
66T0175-20P	547	516	488	412	--	--
66T0190-80P	731	689	654	563	--	--
66T0190-70P	1096	1033	980	843	--	--
66T0220-00P	775	749	713	654	542	500
66T0231-10P	704	686	659	606	515	484
66T0231-70P	992	966	928	853	726	682
66T0238-00P	810	789	758	697	586	550

Part	26 turns (0-70°C)					
	16mA	18mA	20mA	24mA	30mA	32mA
66T0153-30P	607	536	471	--	--	--
66T0153-40P	518	457	402	--	--	--
66T0154-70P	540	474	417	--	--	--
66T0155-00P	411	374	336	267	--	--
66T0157-00P	380	344	303	237	--	--
66T0175-20P	509	464	427	341	--	--
66T0190-80P	687	626	577	471	--	--
66T0190-70P	1029	938	865	705	--	--
66T0220-00P	730	708	659	577	448	405
66T0231-10P	661	646	622	545	434	401
66T0231-70P	931	910	876	767	611	565
66T0238-00P	761	744	715	627	492	454

Part	26 turns (-40-+85°C)					
	16mA	18mA	20mA	24mA	30mA	32mA
66T0153-30P	335	309	287	--	--	--
66T0153-40P	285	263	244	--	--	--
66T0154-70P	300	277	257	--	--	--
66T0155-00P	219	205	191	167	--	--
66T0157-00P	205	192	177	154	--	--
66T0175-20P	268	250	236	206	--	--
66T0190-80P	361	334	316	279	--	--
66T0190-70P	541	501	474	417	--	--
66T0220-00P	396	374	348	316	271	256
66T0231-10P	366	347	327	293	253	242
66T0231-70P	515	488	460	413	357	341
66T0238-00P	421	399	376	338	289	276

MATERIALS 66
MINIMUM INDUCTANCE WITH VARIOUS TURNS

Part	28 turns (25°C)					
	16mA	18mA	20mA	24mA	30mA	32mA
66T0153-30P	758	688	611	--	--	--
66T0153-40P	646	587	521	--	--	--
66T0154-70P	678	606	537	--	--	--
66T0155-00P	505	466	423	346	--	--
66T0157-00P	469	427	387	--	--	--
66T0175-20P	614	577	528	442	--	--
66T0190-80P	820	772	719	604	--	--
66T0190-70P	1229	1157	1077	905	--	--
66T0220-00P	883	841	799	718	572	534
66T0231-10P	804	770	739	672	554	518
66T0231-70P	1132	1085	1041	946	781	730
66T0238-00P	925	887	850	773	638	589

Part	28 turns (0-70°C)					
	16mA	18mA	20mA	24mA	30mA	32mA
66T0153-30P	653	574	494	--	--	--
66T0153-40P	556	489	421	--	--	--
66T0154-70P	578	500	431	--	--	--
66T0155-00P	452	402	354	276	--	--
66T0157-00P	411	363	319	--	--	--
66T0175-20P	559	509	451	358	--	--
66T0190-80P	754	688	621	495	--	--
66T0190-70P	1130	1031	931	741	--	--
66T0220-00P	832	785	725	621	463	426
66T0231-10P	756	729	683	590	457	420
66T0231-70P	1065	1026	962	830	644	592
66T0238-00P	870	838	786	679	526	476

Part	28 turns (-40-+85°C)					
	16mA	18mA	20mA	24mA	30mA	32mA
66T0153-30P	370	342	314	--	--	--
66T0153-40P	315	291	268	--	--	--
66T0154-70P	331	304	280	--	--	--
66T0155-00P	245	227	209	182	--	--
66T0157-00P	227	209	194	--	--	--
66T0175-20P	298	279	258	226	--	--
66T0190-80P	398	374	350	306	--	--
66T0190-70P	597	560	524	458	--	--
66T0220-00P	444	413	388	349	294	281
66T0231-10P	411	384	360	325	278	266
66T0231-70P	578	540	508	457	392	374
66T0238-00P	473	441	415	374	320	303

Part	30 turns (25°C)					
	16mA	18mA	20mA	24mA	30mA	32mA
66T0153-30P	830	730	645	--	--	--
66T0153-40P	707	622	550	--	--	--
66T0154-70P	732	642	--	--	--	--
66T0155-00P	553	504	455	--	--	--
66T0157-00P	514	461	415	--	--	--
66T0175-20P	681	628	570	466	--	--
66T0190-80P	910	844	778	639	--	--
66T0190-70P	1364	1265	1165	958	--	--
66T0220-00P	989	933	886	777	604	--
66T0231-10P	906	863	820	737	587	540
66T0231-70P	1276	1215	1155	1038	827	760
66T0238-00P	1043	993	944	839	676	621

Part	30 turns (0-70°C)					
	16mA	18mA	20mA	24mA	30mA	32mA
66T0153-30P	702	596	513	--	--	--
66T0153-40P	598	508	437	--	--	--
66T0154-70P	612	519	--	--	--	--
66T0155-00P	484	426	374	--	--	--
66T0157-00P	444	385	337	--	--	--
66T0175-20P	609	543	477	372	--	--
66T0190-80P	822	735	657	515	--	--
66T0190-70P	1232	1102	985	771	--	--
66T0220-00P	936	854	789	657	480	--
66T0231-10P	854	806	744	637	475	429
66T0231-70P	1203	1135	1048	897	669	605
66T0238-00P	983	927	857	722	547	494

Part	30 turns (-40-+85°C)					
	16mA	18mA	20mA	24mA	30mA	32mA
66T0153-30P	407	371	341	--	--	--
66T0153-40P	347	316	291	--	--	--
66T0154-70P	362	330	--	--	--	--
66T0155-00P	268	247	229	--	--	--
66T0157-00P	250	229	213	--	--	--
66T0175-20P	330	305	282	246	--	--
66T0190-80P	441	409	381	332	--	--
66T0190-70P	661	613	572	497	--	--
66T0220-00P	492	453	429	381	320	--
66T0231-10P	456	424	398	359	302	286
66T0231-70P	642	598	560	505	425	402
66T0238-00P	525	488	458	409	348	329

MATERIALS 66
MINIMUM INDUCTANCE WITH VARIOUS TURNS

Part	32 turns (25°C)					
	16mA	18mA	20mA	24mA	30mA	32mA
66T0153-30P	887	777	--	--	--	--
66T0153-40P	756	662	--	--	--	--
66T0154-70P	781	681	--	--	--	--
66T0155-00P	601	539	484	--	--	--
66T0157-00P	551	492	435	--	--	--
66T0175-20P	747	673	609	--	--	--
66T0190-80P	1000	917	831	667	--	--
66T0190-70P	1498	1374	1246	1000	--	--
66T0220-00P	1089	1035	971	831	--	--
66T0231-10P	1006	949	901	791	614	--
66T0231-70P	1417	1337	1269	1113	865	--
66T0238-00P	1149	1092	1037	910	707	--

Part	32 turns (0-70°C)					
	16mA	18mA	20mA	24mA	30mA	32mA
66T0153-30P	737	625	--	--	--	--
66T0153-40P	629	533	--	--	--	--
66T0154-70P	642	544	--	--	--	--
66T0155-00P	517	448	392	--	--	--
66T0157-00P	466	403	347	--	--	--
66T0175-20P	656	569	500	--	--	--
66T0190-80P	886	786	691	527	--	--
66T0190-70P	1328	1178	1035	790	--	--
66T0220-00P	1012	935	849	690	--	--
66T0231-10P	952	869	803	668	489	--
66T0231-70P	1340	1224	1131	941	688	--
66T0238-00P	1084	1000	924	769	562	--

Part	32 turns (-40-+85°C)					
	16mA	18mA	20mA	24mA	30mA	32mA
66T0153-30P	442	403	--	--	--	--
66T0153-40P	377	344	--	--	--	--
66T0154-70P	394	359	--	--	--	--
66T0155-00P	293	268	249	--	--	--
66T0157-00P	271	249	229	--	--	--
66T0175-20P	361	330	307	--	--	--
66T0190-80P	484	448	414	357	--	--
66T0190-70P	725	671	621	535	--	--
66T0220-00P	533	502	470	414	--	--
66T0231-10P	501	461	436	388	325	--
66T0231-70P	705	649	615	546	458	--
66T0238-00P	569	530	502	446	374	--

HIGH PERMEABILITY MATERIALS 40
FOR TELECOM & LOW FREQUENCY FILTERING

PARAMETER	SYMBOL	UNIT	40
Relative Initial Permeability	μi		10000
A_L Tolerance		%	± 30
Saturation Flux Density	B_S	Gauss	3800
		mT	380
at Field Intensity	*H*	Oersteds	10
		A/m	800
Residual Flux Density	B_r	Gauss	1400
		mT	140
Coercive Force	H_C	Oersteds	0.40
		A/m	3
Relative Loss Factor at Frequency	tan δ μ i f	10^{-6} MHz	5 0.10
Curie Temperature	T_C	°C	> 120
Resistivity	ρ	Ω-cm	1
Density		g/cm^3	4.8

COMPARING MATERIALS
PERMEABILITY VS. TEMPERATURE

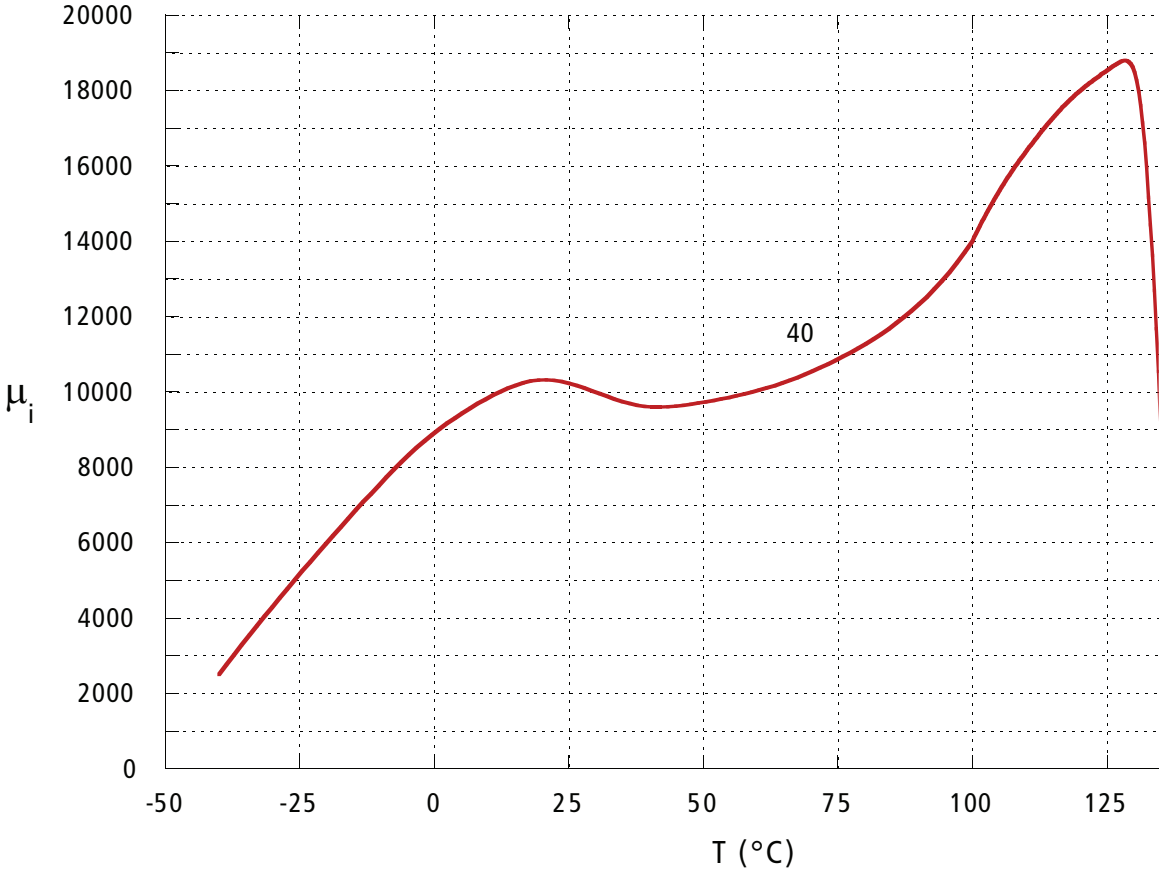

Part Number	Material 40 High Permeability
	10,000 Nominal Perm
	A_L @ 100 KHz (nH/T²)
*T0100-20P	1056
*T0119-00P	2224
*T0135-10P	2703
*T0155-00P	2876
*T0231-10P	3966
*T0238-00P	4564
*T0301-00P	8361
*T0325-00P	5912

MATERIAL 40
TELECOM HIGH PERMEABILITY

10,000 PERMEABILITY

Initial Permeability vs. Temperature

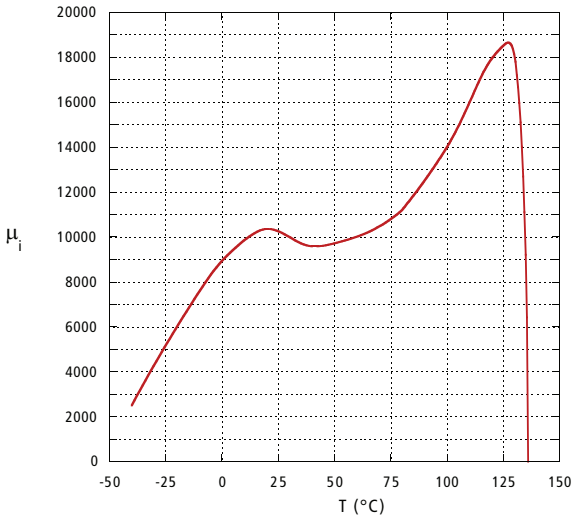

Permeability & Loss Factor vs. Frequency

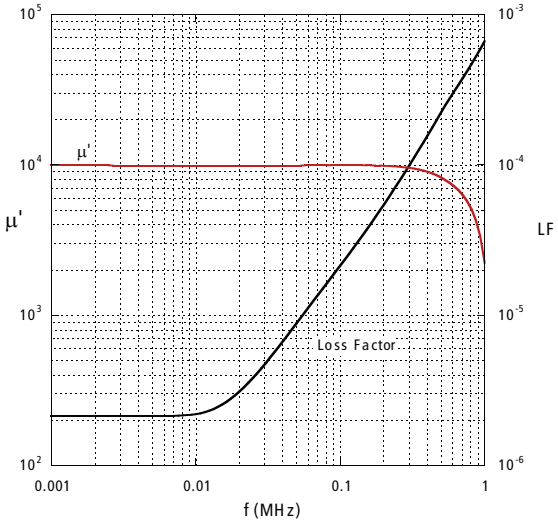

Amplitude Permeability

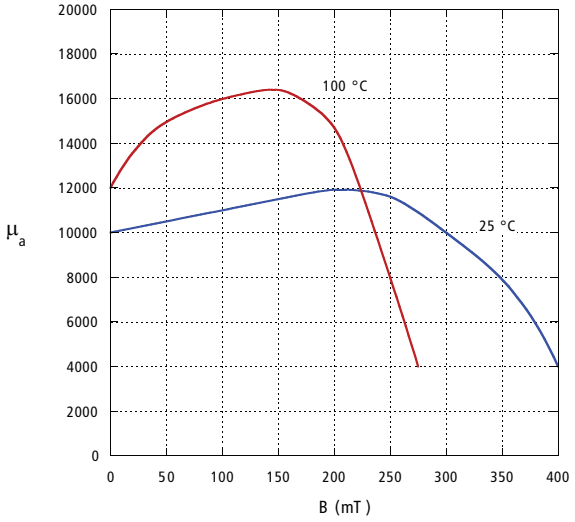

Saturation Flux Density vs. Temperature

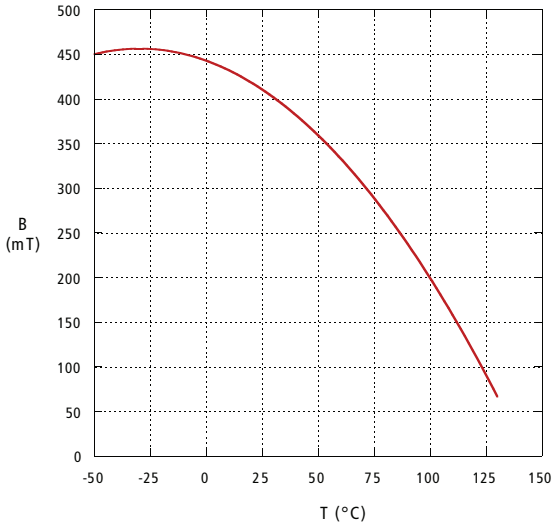

OTHER MATERIALS 35

PARAMETER	SYMBOL	UNIT	35
Relative Initial Permeability	μi		5000
A_L Tolerance		%	± 20
Saturation Flux Density	B_S	Gauss	4500
		mT	450
at Field Intensity	*H*	Oersteds	10
		A/m	800
Residual Flux Density	B_r	Gauss	1000
		mT	100
Coercive Force	H_C	Oersteds	0.10
		A/m	8
Relative Loss Factor at Frequency	$\tan \delta \mu i$ f	10^{-6} MHz	≤ 20 0.100
Curie Temperature	T_C	°C	> 150
Resistivity	ρ	Ω-cm	100
Density		g/cm^3	4.8

MATERIAL 35

5,000 PERMEABILITY

Initial Permeability vs. Temperature

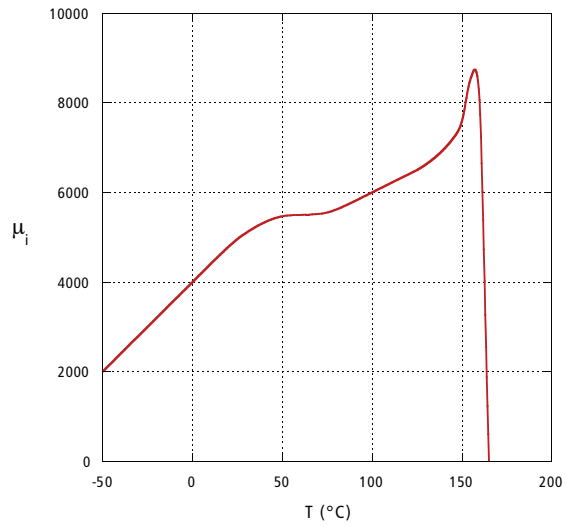

Permeability & Loss Factor vs. Frequency

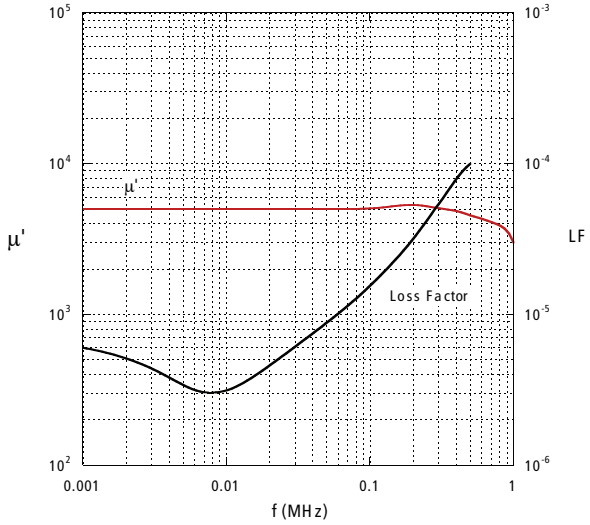

Amplitude Permeability vs. Flux Density

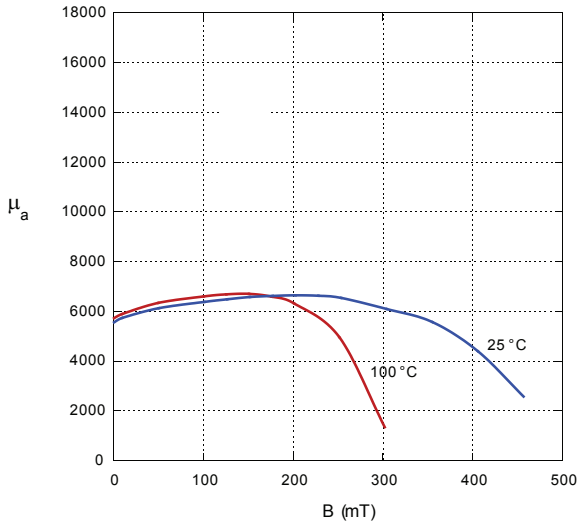

Saturation Flux Density vs. Temperature

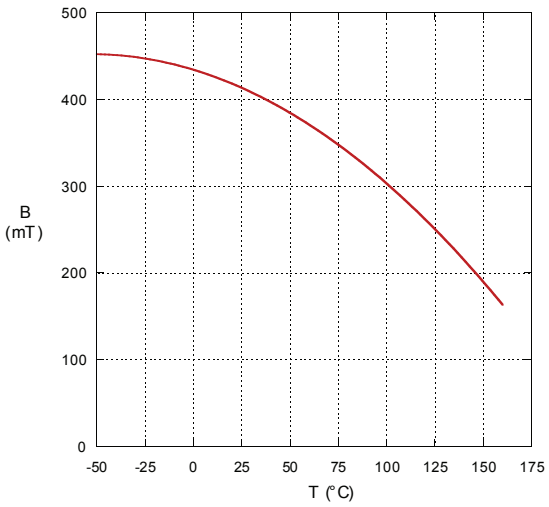

MATERIALS

Typical Values			Common Mode Materials			DC Bias Materials			High Permeability for Telecom & Low Frequency Filtering	High Permeability for Resonant Wireless Charging	Low power loss material	Other Materials
PARAMETER	SYMBOL	UNIT	35 LOW FREQUENCY	28 MID FREQUENCY	25 HIGH FREQUENCY	36 DC BIAS STANDARD TEMP	46 DC BIAS EXTENDED TEMP	66 HIGH DC BIAS EXTENDED TEMP for PoE and PoE+	40	RP	65	35
Relative Initial Permeability	μi		5000	850	125	4500	4000	3200	10000	250	3300	5000
A_L Tolerance		%	± 20	± 20	± 30	± 25	± 25	± 25	± 30	± 25	± 25	± 20
Saturation Flux Density	B_s	Gauss	4500	3250	3600	4500	4500		3800		5300	4500
		mT	450	325	360	450	450	480	380		530	450
at Field Intensity	*H*	Oersteds	10	10	10	10	10		10	15	10	10
		A/m	800	800	800	800	800		800	1200	800	800
Residual Flux Density	B_r	Gauss	1000	2000	2600	1000	1000		1400	2800	800	1000
		mT	100	200	260	100	100	130	140	280	80	100
Coercive Force	H_c	Oersteds	0.10	0.40	1.60	0.10	0.10		0.40	1.25	0.11	0.10
		A/m	8	3	127	8	8	10	3	100	9	8
Relative Loss Factor	tan δ μ i	10^{-6}	20	91	740	10	10		5			≤ 20
at Frequency	f	MHz	0.10	0.10	0.10	0.10	0.10		0.10			0.10
Curie Temperature	T_c	°C	> 150	>175	> 225	> 150	> 150	> 200	> 120	> 200	> 220	> 150
Resistivity	ρ	Ω-cm	100	10^5	10^6	10^2	10^2		1	10^7	6.5	100
Density		g/cm^3	4.8	4.9	4.9	4.8	4.8	4.9	4.8		4.8	4.8

TOROID SPECIFICATIONS



Custom Parts Also Available

Part Number	MM			INCHES			wt/k kgs	L_e mm	A_e mm2	V_e mm3	C_1 mm-1	MLT mm/Turn
	OD	ID	HT	OD	ID	HT						
*T0100-00P	2.54	1.27	1.27	0.100	0.050	0.050	0.02	5.531	0.775	4.286	7.138	3.81
*T0100-20P	2.54	1.27	0.76	0.100	0.050	0.030	0.01	5.531	0.465	2.572	11.896	2.79
*T0100-30P	2.54	1.27	0.99	0.100	0.050	0.040	0.02	5.531	0.604	3.343	9.151	3.25
*T0100-40P	2.54	1.27	2.54	0.100	0.050	0.100	0.05	5.531	1.550	8.572	3.569	6.35
*T0101-10P	2.54	1.50	0.99	0.100	0.060	0.040	0.02	6.059	0.504	3.054	12.021	3.02
*T0115-00P	2.92	1.63	1.78	0.120	0.060	0.070	0.04	6.749	1.119	7.553	6.030	4.85
*T0115-10P	2.92	1.63	2.41	0.120	0.060	0.100	0.05	6.749	1.519	10.251	4.443	6.12
*T0119-00P	3.05	1.27	1.27	0.120	0.050	0.050	0.04	5.988	1.060	6.345	5.651	4.32
*T0119-10P	3.05	1.27	0.76	0.120	0.050	0.030	0.02	5.988	0.636	3.807	9.419	3.30
*T0119-20P	3.05	1.27	0.86	0.120	0.050	0.030	0.03	5.988	0.721	4.314	8.310	3.51
*T0119-40P	3.05	1.27	2.54	0.120	0.050	0.100	0.07	5.988	2.119	12.690	2.826	6.86
*T0120-00P	3.05	1.78	1.52	0.120	0.070	0.060	0.04	7.226	0.945	6.826	7.649	4.32
*T0120-80P	3.05	1.78	2.03	0.120	0.070	0.080	0.05	7.226	1.260	9.101	5.737	5.33
*T0121-20P	3.05	1.52	2.06	0.120	0.060	0.080	0.05	6.637	1.506	10.000	4.406	5.64
*T0122-00P	3.05	1.65	1.65	0.120	0.070	0.070	0.04	6.938	1.118	7.755	6.207	4.70
*T0122-30P	3.05	1.65	2.39	0.120	0.070	0.090	0.06	6.938	1.616	11.215	4.292	6.17
*T0130-00P	3.30	1.27	1.27	0.130	0.050	0.050	0.05	6.195	1.196	7.412	5.178	4.57
*T0135-00P	3.43	1.78	1.27	0.140	0.070	0.050	0.04	7.619	1.011	7.707	7.533	4.19
*T0135-10P	3.43	1.78	2.06	0.140	0.070	0.080	0.07	7.619	1.639	12.485	4.650	5.77
*T0135-20P	3.43	1.78	0.86	0.140	0.070	0.030	0.03	7.619	0.688	5.241	11.078	3.38
*T0135-30P	3.43	1.78	2.54	0.140	0.070	0.100	0.08	7.619	2.023	15.414	3.766	6.73
*T0135-40P	3.43	1.78	1.78	0.140	0.070	0.070	0.06	7.619	1.416	10.790	5.381	5.21
*T0135-60P	3.43	1.78	1.52	0.140	0.070	0.060	0.05	7.619	1.214	9.248	6.277	4.70
*T0137-00P	3.43	1.52	0.76	0.140	0.060	0.030	0.03	6.989	0.687	4.803	10.168	3.43
*T0145-00P	3.68	1.65	2.54	0.150	0.070	0.100	0.11	7.543	2.447	18.454	3.083	7.11
*T0153-00P	3.94	1.78	1.27	0.160	0.070	0.050	0.06	8.097	1.301	10.534	6.224	4.70
*T0153-30P	3.94	1.78	2.98	0.160	0.070	0.120	0.17	8.054	3.142	25.309	2.563	8.22
*T0153-40P	3.94	1.78	2.54	0.155	0.070	0.100	0.14	8.054	2.682	21.603	3.002	7.34

TOROID SPECIFICATIONS

Part Number	A_L (nH per turn squared)					
	Common Mode		DC Bias			Other
	25	28	36	46	66	35
	125	850	4500	4000	3200	5000
*T0100-00P	22	150	--	--	--	880
*T0100-20P	13	90	475	--	--	528
*T0100-30P	--	117	--	--	--	687
*T0100-40P	--	--	1585	1408	--	--
*T0101-10P	--	--	--	--	--	--
*T0115-00P	--	--	938	834	--	1042
*T0115-10P	--	--	1273	1131	--	--
*T0119-00P	28	189	--	--	--	1112
*T0119-10P	--	113	--	--	--	667
*T0119-20P	--	129	--	--	--	--
*T0119-40P	--	--	2001	1779	--	--
*T0120-00P	21	140	--	--	--	821
*T0120-80P	--	186	986	876	--	--
*T0121-20P	--	--	--	1141	--	--
*T0122-00P	--	172	--	--	--	--
*T0122-30P	--	--	1317	1171	--	--
*T0130-00P	--	206	--	--	--	--
*T0135-00P	21	142	751	667	--	834
*T0135-10P	--	230	1216	1081	--	1351
*T0135-20P	14	96	510	--	--	--
*T0135-30P	--	--	--	--	--	--
*T0135-40P	--	--	1051	--	--	1168
*T0135-60P	25	170	901	--	--	1001
*T0137-00P	--	--	556	--	--	--
*T0145-00P	--	--	--	1630	--	--
*T0153-00P	--	--	909	--	--	--
*T0153-30P	--	--	--	--	1516	--
*T0153-40P	--	--	1817	--	1292	--

Catalog Parts are designated by AL value.

TOROID SPECIFICATIONS



Custom Parts Also Available

Part Number	MM			INCHES			wt/k kgs	L_e mm	A_e mm2	V_e mm3	C_1 mm-1	MLT mm/Turn
	OD	ID	HT	OD	ID	HT						
*T0153-60P	3.94	1.78	1.52	0.155	0.070	0.060	0.07	8.097	1.561	12.641	5.186	5.21
*T0153-70P	3.94	1.78	1.78	0.155	0.070	0.070	0.08	8.097	1.821	14.748	4.445	5.72
*T0154-00P	3.94	1.68	1.37	0.155	0.066	0.054	0.07	7.831	1.459	11.429	5.366	5.00
*T0154-70P	3.94	1.68	2.54	0.155	0.066	0.100	0.15	7.784	2.783	21.660	2.798	7.44
*T0155-00P	3.94	2.24	2.54	0.155	0.088	0.100	0.14	9.165	2.185	20.029	4.194	6.88
*T0155-10P	3.94	2.24	1.27	0.155	0.088	0.050	0.05	9.196	1.052	9.677	8.740	4.24
*T0155-20P	3.94	2.24	2.01	0.155	0.088	0.079	0.08	9.196	1.663	15.289	5.531	5.72
*T0155-80P	3.94	2.24	1.65	0.155	0.088	0.065	0.07	9.196	1.368	12.580	6.723	5.00
*T0157-00P	4.00	2.01	2.01	0.157	0.079	0.079	0.12	8.687	1.990	17.289	4.365	6.11
*T0157-10P	3.99	2.01	0.99	0.157	0.079	0.039	0.05	8.715	0.944	8.223	9.235	3.96
*T0175-20P	4.45	2.29	2.54	0.175	0.090	0.100	0.18	9.796	2.727	26.716	3.592	7.34
*T0190-00P	4.83	2.29	2.54	0.190	0.090	0.100	0.18	10.196	3.080	31.401	3.311	7.62
*T0190-10P	4.83	2.29	1.27	0.190	0.090	0.050	0.09	10.196	1.540	15.701	6.621	5.08
*T0190-70P	4.83	2.29	4.45	0.190	0.090	0.175	0.38	10.196	5.396	55.014	1.890	11.44
*T0190-80P	4.83	2.29	2.97	0.190	0.090	0.117	0.26	10.155	3.697	37.545	2.747	8.58
*T0195-20P	4.95	1.57	0.76	0.195	0.062	0.030	0.06	8.312	1.155	9.601	7.196	4.90
*T0220-00P	5.60	2.80	3.20	0.220	0.110	0.126	0.37	12.194	4.305	52.502	2.832	9.20
*T0231-00P	5.84	3.05	1.52	0.230	0.120	0.060	0.14	13.026	2.055	26.775	6.337	5.84
*T0231-10P	5.84	3.05	3.05	0.230	0.120	0.120	0.39	12.991	4.215	54.753	3.082	8.99
*T0231-20P	5.84	3.05	3.18	0.230	0.120	0.125	0.30	13.026	4.282	55.780	3.042	9.14
*T0231-30P	5.84	3.05	2.54	0.230	0.120	0.100	0.24	13.026	3.426	44.624	3.802	7.87
*T0231-50P	5.84	3.05	2.03	0.230	0.120	0.080	0.19	13.026	2.741	35.699	4.753	6.86
*T0231-70P	5.84	3.05	4.29	0.230	0.120	0.169	0.55	12.991	5.922	76.926	2.194	11.48
*T0238-00P	6.05	2.95	3.18	0.238	0.116	0.125	0.44	12.939	4.821	62.379	2.684	9.55
*T0301-00P	7.62	3.18	4.78	0.300	0.125	0.188	0.88	14.970	9.960	149.103	1.503	14.00
*T0315-00P	8.00	3.18	4.78	0.315	0.125	0.188	0.99	15.284	10.736	164.094	1.424	14.38
*T0325-00P	8.26	4.45	4.78	0.325	0.175	0.188	0.89	18.730	8.812	165.042	2.126	13.36

TOROID SPECIFICATIONS

Part Number	A_L (nH per turn squared)					
	Common Mode		DC Bias			Other
	25	28	36	46	66	35
	125	850	4500	4000	3200	5000
*T0153-60P	--	--	1090	969	--	--
*T0153-70P	--	--	1272	--	--	--
*T0154-00P	--	--	--	--	--	1171
*T0154-70P	--	--	--	--	1388	--
*T0155-00P	--	244	1294	--	920	--
*T0155-10P	18	122	--	--	--	719
*T0155-20P	--	193	--	--	--	1136
*T0155-80P	--	159	--	--	--	--
*T0157-00P	--	--	--	--	885	--
*T0157-10P	--	116	--	--	--	--
*T0175-20P	--	--	--	--	1081	--
*T0190-00P	--	--	--	--	--	--
*T0190-10P	--	161	--	--	--	949
*T0190-70P	--	--	--	--	2120	--
*T0190-80P	--	--	--	--	1420	--
*T0195-20P	--	--	786	--	--	--
*T0220-00P	--	--	--	--	1420	--
*T0231-00P	25	169	892	--	--	991
*T0231-10P	--	337	--	--	1269	1983
*T0231-20P	--	351	--	--	--	2066
*T0231-30P	--	--	--	--	--	1652
*T0231-50P	--	--	--	--	--	--
*T0231-70P	--	--	--	--	1787	--
*T0238-00P	--	--	--	--	1460	--
*T0301-00P	--	--	--	--	--	4181
*T0315-00P	--	--	--	--	--	--
*T0325-00P	--	--	--	--	--	--

Catalog Parts are designated by AL value.

MEDIUM & LARGE TOROIDS

Part Number	Standard Toroid Sizes						wt/k kgs	L_e mm	A_e mm2	V_e mm3	C_1 mm-1	MLT mm/ Turn	A_L (nH per turn squared)	
	MM			INCHES									35 (5000 µi)	40 (10000 µi)
	OD	ID	HT	OD	ID	HT								
*T0375-00H	9.53	4.75	6.35	0.375	0.187	0.250	1.66	20.716	14.579	302.005	1.42	17.48	4422	--
*T0375-10H	9.53	4.75	3.18	0.375	0.187	0.125	0.83	20.716	7.301	151.244	2.84	11.14	2214	--
*T0375-30H	9.53	4.75	4.78	0.375	0.187	0.188	1.25	20.716	10.963	227.108	1.89	14.33	3325	--
*T0394-00H	10.00	5.00	5.00	0.394	0.197	0.197	1.44	21.788	12.018	261.844	1.81	15.01	3466	--
*T0394-20H	10.00	5.00	4.00	0.394	0.197	0.157	1.15	21.788	9.602	209.209	2.27	12.99	--	--
*T0395-10H	10.00	6.00	4.00	0.394	0.236	0.157	0.99	24.007	7.886	189.327	3.04	12.03	--	--
*T0472-00H	12.00	6.00	4.00	0.472	0.236	0.157	1.65	26.141	11.515	301.024	2.27	13.99	2768	--
*T0500-00H	12.70	7.92	3.18	0.500	0.312	0.125	1.20	31.216	7.449	232.536	4.19	11.13	1499	--
*T0500-10H	12.70	7.92	6.35	0.500	0.312	0.250	2.40	31.216	14.898	465.071	2.10	17.48	2968	--
*T0500-40H	12.70	7.92	5.08	0.500	0.312	0.200	1.92	31.216	11.919	372.057	2.62	14.94	2396	--
*T0501-00H	12.70	7.14	4.78	0.500	0.281	0.188	2.02	29.500	12.920	381.139	2.28	15.11	2715	5430
*T0501-10H	12.70	7.14	6.35	0.500	0.281	0.250	2.68	29.500	17.181	506.834	1.72	18.26	3659	7318
*T0520-00H	13.21	7.37	3.96	0.520	0.290	0.156	1.82	30.551	11.251	343.728	2.72	13.77	2314	--
*T0520-20H	13.21	7.37	6.05	0.520	0.290	0.238	2.78	30.551	17.165	524.406	1.78	17.93	--	--
*T0551-00H	14.00	9.00	5.00	0.551	0.354	0.197	2.20	34.977	12.293	429.970	2.85	15.00	--	4416
*T0625-00H	15.88	8.89	4.70	0.625	0.350	0.185	3.11	36.804	15.959	587.354	2.31	16.38	2725	5449
*T0632-00H	16.00	9.00	5.00	0.630	0.354	0.197	3.35	37.167	17.062	634.133	2.18	17.01	--	5763
*T0634-00H	16.00	12.00	8.00	0.630	0.472	0.315	3.43	43.363	15.944	691.305	2.72	20.00	--	4603
*T0711-00H	18.00	10.00	7.00	0.709	0.394	0.276	6.01	41.574	27.252	1132.994	1.53	22.00	4115	8229
*T0787-10H	20.00	10.00	10.00	0.787	0.394	0.394	11.49	43.560	48.003	2091.035	0.91	30.00	6931	13863
*T0866-00H	22.00	14.00	6.50	0.866	0.551	0.256	7.17	54.654	25.574	1397.741	2.14	21.01	2940	5880
*T0866-10H	22.00	14.00	8.00	0.866	0.551	0.315	8.83	54.654	31.468	1719.877	1.74	24.00	--	7240
*T0870-00H	22.10	13.72	6.35	0.870	0.540	0.250	7.30	54.179	26.114	1414.839	2.07	21.08	3020	6040
*T0870-10H	22.10	13.72	12.70	0.870	0.540	0.500	14.60	54.179	52.228	2829.677	1.04	33.78	6040	12080
*T0984-00H	25.00	15.00	13.00	0.984	0.591	0.512	19.93	60.184	63.628	3829.426	0.95	36.01	--	13290
*T1000-00H	25.40	15.50	10.00	1.000	0.610	0.394	15.51	61.693	48.571	2996.469	1.27	29.90	4830	9660
*T1142-00H	29.00	19.00	7.49	1.142	0.748	0.295	13.78	73.204	36.939	2704.070	1.98	24.99	3170	6340
*T1142-10H	29.00	19.00	13.80	1.142	0.748	0.543	25.37	73.204	67.993	4977.322	1.08	37.60	--	11671
*T1220-00H	31.00	19.00	13.00	1.220	0.748	0.512	29.88	75.973	76.420	5767.633	0.99	38.00	--	12728
*T1417-00H	36.00	23.00	10.00	1.417	0.906	0.394	29.38	84.664	63.874	5727.244	1.40	33.00	4543	9085
*T1417-10H	36.00	23.00	15.00	1.417	0.906	0.591	44.07	84.664	95.812	8590.866	0.94	43.00	6743	13440

BALUN CORES

Part Number	Fig #	Length A (mm)	Width B (mm)	Height C (mm)	ID D (mm)	E (mm)	wt/k kgs	Electrical Properties					
								25		28		35	
								L	Z @ 300 MHz 3 Turns	L	Z @ 150 MHz 1 Turn	L	Z @ 10 MHz 1 Turn
*N0136-00P	1	3.45	2.01	2.36	0.86	1.45	0.06	0.050	14.26	0.576	37.00	2.96	50.00
*N0136-10P	1	3.45	2.01	1.50	0.86	1.45	0.04	0.029	8.00	0.197	20.76	--	--
*N0136-30P	1	3.45	2.01	1.65	0.86	1.45	0.06	--	--	--	--	1.60	30.86
*N0138-00P	1	3.45	2.01	0.68	0.86	1.45	0.02	0.014	3.63	--	--	--	--
*N0252-000	2	6.35	--	6.35	1.19	3.05	0.88	0.383	90.07	--	--	9.90	105.00
*N0277-00P	1	7.04	4.06	6.20	1.80	2.90	0.61	0.229	57.00	1.920	114.00	--	--
*N0372-00P	3	9.40	5.35	8.00	2.59	5.24	1.46	--	--	--	--	7.00	154.00

Figure #1

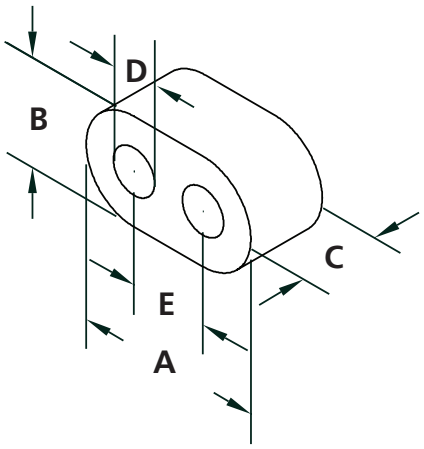

Figure #2

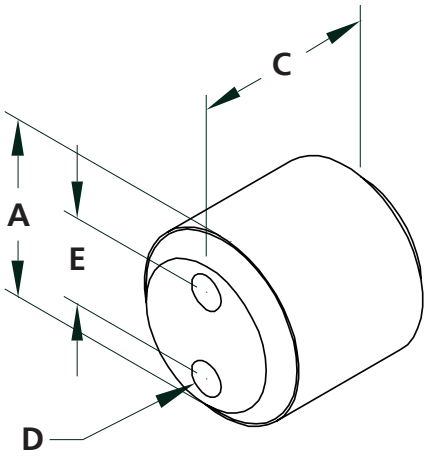

Figure #3

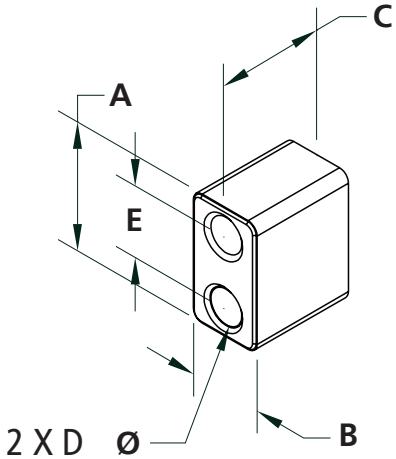

FERRITE PROPERTY MEASUREMENT

INITIAL PERMEABILITY, LOSSES & INDUCTANCE FACTOR

Three properties can be measured, using an inductance meter to measure an equivalent series inductance and resistance. From these values, and a knowledge of the inductor sample, these parameters may be derived. These are:

Inductance Factor, A_L, given by

$$A_{L[nH/t^2]} = \frac{L_{[nH]}}{n^2}$$

where L is the inductance in nH, and n is the number of turns,

Initial Permeability (the real part only), μ_i, given by

$$\mu_i = \frac{L}{L_o}$$

where L is the measured inductance, and L_o is the air core inductance.

Losses, described by tand/μ_i, given by

$$\frac{tan\,\delta}{\mu_i} = \frac{L_o R_s}{\omega L^2}$$

where μ_i is the initial permeability, tanδ/μ_i, is the lossy component of the total reactance, ω is 2πf, and other terms as defined above.

Equipment: Precision LCR meter.

Test Conditions: Flux Density < 10 Gauss

Frequency: as specified.

The core is stabilized at room temperature (22°C) and wound with the correct number of turns. Since most LCR meters have a resistor, usually 100 Ω, in series between the oscillator and the unknown to be measured, the number of turns should be chosen such that the reactance of the core is at least 10 Ω. This condition ensures that a minimum of 10% of the test signal is applied to the core.

With the frequency set and voltage adjusted for test conditions, the LCR meter will measure R_s and L_s. Caution: When measuring very small value reactances, be sure to test the accuracy of the measurement instrument.

CHANGES IN INDUCTANCE VERSUS TEMPERATURE & CURIE TEMPERATURE

These two tests may be performed using an inductance meter and a temperature controlled oven. The inductance meter will measure R_s and L_s as described above.

Equipment: Precision LCR meter
Temperature Controlled
Chamber for DUT

Test Conditions: Flux Density <10 Gauss
Temperature as specified

Frequency: 10 to 100 kHz.

The cores to be tested are placed in the temperature chamber and subjected to two stabilizing temperature cycles, with approximately two hours at each temperature.

The first inductance measurement, L_1 is made at the lowest temperature, θ_1, after a thirty minute soak at that temperature. This procedure is repeated up to the highest specified temperature, θ_2. A measurement made in the 20°C to 25°C range is considered the reference inductance, L_{ref}, at the reference temperature, θ_{ref}.

After measuring the highest temperature, a final measurement should be made again at the reference temperature. Both measurements of the reference inductance should be the same within the bridge accuracy. If these two readings are significantly dissimilar, more temperature stabilizing cycles may be needed to eliminate irreversible inductance changes in the samples.
From the inductance reading at various temperatures, the temperature coefficient of inductance may be calculated from

$$T.C. = \frac{L_{\theta 2} - L_{ref}}{L_{ref}(\theta_2 - \theta_{ref})} = \frac{L_{\theta 2} - L_{\theta 1}}{L_{ref}(\theta_2 - \theta_1)}$$

where all terms are as defined above.

For Curie Temperature measurement, temperature is slowly increased while inductance is monitored. The temperature at which core inductance decreases to 10% of the room temperature value is the Curie Temperature.

FERRITE PROPERTY MEASUREMENT

FLUX DENSITY, RESIDUAL FLUX DENSITY, COERCIVE FORCE, & AMPLITUDE PERMEABILITY

There are four intrinsic material parameters that can be determined from the B-H loop measurement. The core under test is used as a transformer and the relationship between winding current (H) and secondary winding integrated voltage (B) is measured. This relationship is displayed using the "X versus Y" display mode on an oscilloscope. Magnetic terms are readily expressed in electrical terms to calibrate the display in units of Oersteds (Oe) versus Gauss (G). Once this calibration is achieved, salient points on the B-H curve may be easily obtained.

Equipment: Function Generator
Amplifier
RC Network
Dual Channel Oscilloscope

The test circuit is as shown at the right. Resistor R_1 is kept small in comparison with the inductive reactance of the wound sample. Cores must be properly installed and wound with primary and secondary winding. Field strength, H, is set by varying the current which is read as voltage across resistor R_1.

$$H_{[Oe]} = \frac{0.4\pi nI}{l_{e[cm]}} = \frac{0.4\pi n_p V_p}{l_{e(cm)} R_1}$$

Flux density in the core is determined by integrating the secondary voltage using the RC circuit.

$$B_{[G]} = \frac{R_2 C V_p 10^8}{n_s A_{e[cm^2]}}$$

where R_2 is the integrating resistance, and C is the integrating capacitor.

From the displayed hysteresis loop saturation flux density, B_s, valueVs for coercive force, H_c, and residual flux density, B_r, may be determined once the oscilloscope is calibrated for field strength H and Flux Density.
Finally, amplitude permeability, μ_a, is given by

$$\mu_a = \frac{B}{H}$$

where B represents peak flux density between 10 Gauss and saturation, an H is the corresponding field strength.

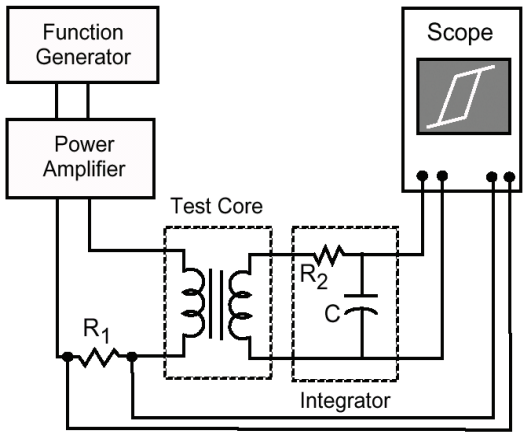

Test set up for measuring parameters of the B-H Loop.

FERRITE PROPERTY MEASUREMENT

PULSE CHARACTERISTICS

An open collector drive circuit is used to drive a pulse through a transformer with the secondary open circuited. The effect of the transformer on the pulse is observed by monitoring waveforms.

Equipment: Pulse Generator
DC Power Supply
Pulse Drive Circuit–appropriate for application
Dual Channel Oscilloscope
Current Probe

Test Conditions: Pulse Amplitude, Pulse Width, and Pulse Repetition Rate as specified.

Temperature: 23°C ± 3°C.

The test toroid to be measured is wound with a sufficient number of turns to produce at least 100 µH of inductance. The core is excited by applying square voltage pulses. The test circuit is shown below.

Pulse inductance, L_P, pulse Inductance Factor, A_{LP}, and the voltage time product, E-T, are measured in accordance with section 16.7 of IEC367-1.

Pulse inductance is specified as greater than 90% of sine wave initial inductance.

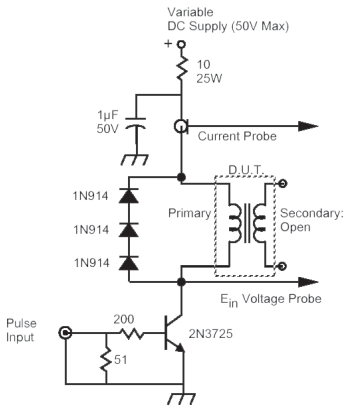

Test set up for measuring pulse characteristics

POWER LOSS

Power loss is readily measured using a Volt-Amp-Watt (VAW) meter.

Equipment: Signal Generator
Power Amplifier
Clark Hess 256 VAW Meter
Temperature Chamber

The equipment is connected as shown below.

Frequency is set and voltage is adjusted to the desired flux density level, given by the relation

$$E_{[Vrms]} = 4.44fnB_{[G]}A_{e[cm^2]}10^{-8}$$

Power losses are indicated by the VAW meter in watts. Measurements are made as rapidly as possible to avoid temperature rise in the samples.

Material power loss density is determined by dividing the measured power loss by the effective volume of the ferrite core.

A VAW meter may also be used to measure magnetizing current, I_m. This value can be used to calculate the winding loss ($I_m^2 R_{ac}$), a part of the total measured power loss.

Accuracy at higher frequencies is highly dependant on phase shift between the voltage and current.

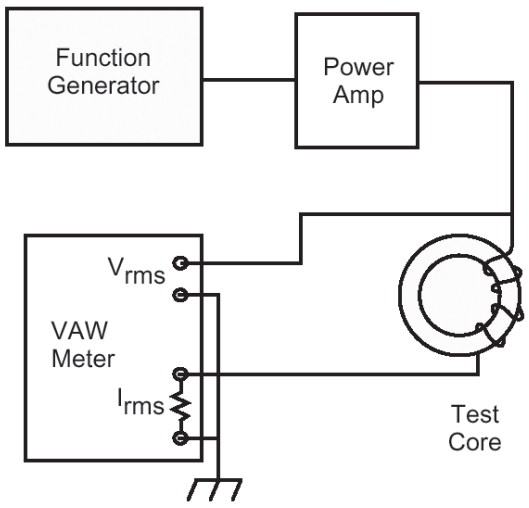

Test set up for measuring power loss.

FERRITE PROPERTY MEASUREMENT

MEASUREMENT OF IMPEDANCE OF FERRITE COMPONENTS

The most common property referenced for soft magnetic materials is permeability. Impedance is a complex property comprised of imaginary (reactive) and real (resistive) components. At the lower end of the RF scale, impedance can be calculated from inductance as $Z \sim 2\pi fL = X_L$ and is dominated by the reactive component of permeability.

As frequency increases, impedance is driven by the resistive component and can be calculated as $Z = R^2 + (j\omega L)^2$, where R represents the resistive component and $j\omega L$ represents the reactive component. At higher frequencies permeability will approach zero and impedance will reach a maximum value comprised of a purely resistive component. Impedance, like permeability, varies with temperature, frequency, signal current, DC bias, and the presence of any extraneous fields.

The useful impedance obtained from a ferrite component depends on its application, number of turns, and winding method. See below for an illustration of the effect of differential versus common mode winding techniques on the net impedance of a core.

Impedance measurements are made on an RF impedance analyzer. Measurements for this catalog were made on a Hewlett-Packard E4991A Network/Spectrum Analyzer with a E4991A Impedance Test Kit. All impedance curves represent gross measurements with number of turns and DC Bias current applied as shown (unless noted other-wise). In all cases the length of the conductive path between the part under test and the test fixture is kept to a minimum and in a fixed position to minimize parasitic capacitance.

All impedance measurements with DC Bias utilize the internal circuitry of the impedance analyzer. Measurements are also possible with an external source of DC current using an RF choke and a blocking capacitor to isolate the bias circuit from the RF circuit.

IMPEDANCE vs. DC BIAS
COMMON vs. DIFFERENTIAL MODE WINDING

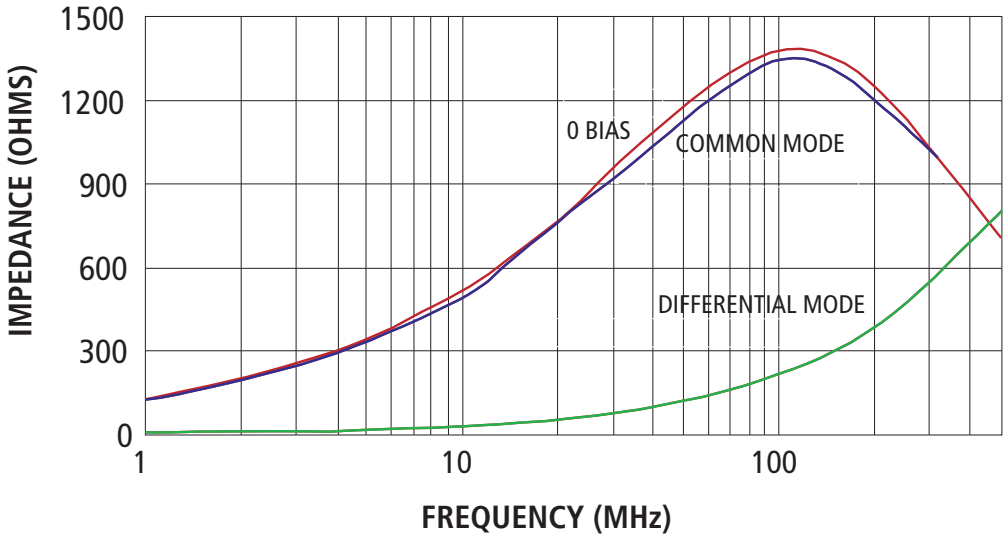

28T0155-200, 10 AMP-TURNS

These curves show the effect of ten amp-turns of DC bias on the same core wound two different ways. In the differential mode, wherein there is a single winding carrying direct current, the core is pushed far into saturation (ten amp-turns on a T0155-200 corresponds to 13.7 Oersteds). In the common mode, wherein the direct current returns through a coil of the opposite winding direction and an equal number of turns, the only deviation from zero-bias arises from leakage inductance, which is inherently low in toroids.

TERMINOLOGY

The following glossary of terms is adapted from the Magnetic Materials Producers Association publication SFG-92 and other sources.

Air Core Inductance (L_0 [Henry]): The inductance that would be measured if the core had unity permeability and the flux distribution remained unaltered.

Circular Mils (c.m. [mils^2]): The cross sectional area of a circular conductor calculated as a square conductor, ie, area in c.m. is D2, where D is the diameter of the wire.
See also "Square Mils."

Coercive Force (H_c [Oe; Amp/m]): The magnetization field strength required to bring the magnetic flux density of a magnetized material to zero. See "Field Strength."

Common Mode Current: The component of signal current that induces electric and magnetic fields that do not tend to cancel one another. For example, in a circuit with one outgoing signal conductor and one return ("ground") conductor, the common mode current is the component of the total signal current that flows in the same direction on both conductors. Common mode current is the primary source of EMI in many electronic systems.

Common Mode Type I: On a single phase Wye bus, the conduction mode in which phase, neutral, and ground currents are in phase. The return current path is through the ground plane and the case.

Common Mode Type II: On a single phase Wye bus, the conduction mode in which phase and neutral currents are in phase, but the green wire currents are the return path, therefore 180° out of phase.

Common Mode Voltage: The voltage that drives directed common mode (noise) currents.

Core Constant (C_1 [cm^{-1}; mm^{-1}]): The summation of the magnetic path length of each section of the circuit divided by the corresponding area of the same section. See section entitled "Magnetic Design Formulas." C_1 is a frequently useful ratio in the analysis and prediction of core performance.

Core Constant (C_2 [cm^{-3}; mm^{-3}]): The summation of the magnetic path length of each section of the magnetic circuit divided by the square of the corresponding magnetic area of the same section. See section entitled "Magnetic Design Formulas."

Curie Temperature (T_c [°C]): The transition temperature above which a ferrite loses its ferromagnetic properties. Usually defined as the temperature at which µi falls to 10% of its room temperature value.

Dielectric Withstanding Voltage (DWV [V]): DWV is the voltage level at which the dielectric breaks down, allowing conduction between isolated conductors or between a conductor and the core. Isolation, or Hipot is the ability of a transformer to withstand a specific breakdown voltage between the primary and secondary windings.

Differential Mode: A current conduction mode in which currents, relative to two conductors, are flowing 180° out of phase, with equal magnitude within the conductors.

Differential Mode Current: The intended signal currents that are equal and oppositely directed on pairs of signal and return ("ground") conductors.

Differential Mode Voltage: The voltage that drives equal and oppositely directed currents to achieve an intended circuit function; the source of differential mode currents.

Disaccommodation (D): The proportional change of permeability after a disturbance of a magnetic material, measured at constant temperature, over a given time interval.

Disaccommodation Factor (DF): The disaccom-modation factor is the disaccommodation after magnetic conditioning divided by the permeability of the first measurement times $\log_{10}$ of the ratio of time interval.

Effective Area (A_e [cm^2; mm^2]: For a magnetic core of a given geometry, the magnetic cross-sectional area that a hypothetical toroidal core of the same material properties would possess to be the magnetic equivalent to the given core.

Effective Length (l_e [cm; mm]): For a magnetic core of a given geometry, the magnetic length that a hypothetical toroidal core of the same material properties would possess to be the magnetic equivalent to the given core.

Effective Volume (V_e [cm^3; mm^3]): For a magnetic core of a given geometry, the magnetic volume that a hypothetical toroidal core of the same material properties would possess to be the magnetic equivalent to the given core.

Field Strength (H [Oe; Amp/m]): The parameter characterizing the amplitude of ac or dc field strength. Field strength is determined by the magnitude of current and geometry of the windings.

Flux Density (B [Gauss; Tesla]): The corresponding parameter for the induced magnetic field in an area perpendicular to the flux path. Flux density is determined by the field strength and permeability of the medium in which it is measured.

TERMINOLOGY

Impedance Z [Ohm]: The impedance of a ferrite may be expressed in terms of its complex permeability:

$$Z = j\omega L_s + R_s = j\omega L_o (\mu'_s - j\mu''_s) \text{ (ohm)}$$

Incremental Permeability [μΔ]: The permeability of a magnetic material about a specified operating point and applied H (especially under DC bias). The incremental permeability is expressed as the slope of the B-H characteristic about the given operating point.

$$\mu\Delta = \frac{\Delta B}{\Delta H}$$

Inductance Factor (AL): A constant for a given geometrical shape that when multiplied by the square of the number of turns, gives the inductance in nano Henrys. Initial permeability (flux density of less than 10 Gauss) is assumed in the inductance factor.

Insulation Resistance [Ohm]: The insulation properties of the insulating material as measured in Ohms.

Leakage Flux: Leakage flux is the small fraction of the total magnetic flux in a transformer or common mode choke that does not contribute to the magnetic coupling of the windings of the device. In a transformer with a single set of primary and secondary windings, the leakage flux is that portion of flux that is produced by the primary that does not link the secondary. The presence of leakage flux in a transformer or common mode choke is modeled as a small "leakage" inductance in series with each winding. In a multi-winding choke or transformer, leakage inductance is the inductance measured at one winding with all other windings short circuited.

Leakage Inductance (L_λ [Henry]): That component of inductance that results from non-ideal coupling of flux to a core and/or other windings. As applied to the primary side of a transformer, the quotient of flux not coupled to the secondary winding and the current in the primary winding. As applied to an inductor, the quotient of flux outside the core and the current through the winding. In a multi-winding choke or transformer, leakage inductance is the inductance measured at one winding with all other windings short circuited.

Loss Factor ($\tan\delta/\mu_i$): The phase displacement between the fundamental components of the flux density and the field strength divided by the initial permeability. This term is essentially normalized loss. Note that $1/\tan\delta$ equals Q. This term is most useful as an indicator of the useful high Q bandwidth of a material. Above a specific frequency, depending on the material, loss factor normally undergoes a rapid increase due magnetic resonance. Note that a high Q is not de-sirable in all applications, especially EMI or filtering.

Loss Tangent: The measure of the loss of a magnetic material at high operating frequencies due to the oscillation of microscopic magnetic regions within the material. The loss tangent is expressed as the ratio of the imaginary permeability component μ" to the real permeability μ' of the material.

Magnetic Constant (μ_o [Henry/m]): The permeability of free space. The constant μ_o has a value of $4\pi \times 10^{-7}$.

Magnetic Field Intensity or Magnetizing Force (|H|): The mmf per unit length. H can be considered to be a measure of the strength or effort that the magnetomotive force applies to a magnetic circuit to establish a magnetic field. H may be expressed as $H = NI/\vartheta$, where ϑ = the mean length of the magnetic circuit in meters.

Magnetic Hysteresis: In a magnetic material, the irreversible variation of the flux density or magnetization which is associated with the change of magnetic field strength and is independent of the rate of change. Hysteresis results in the square or "open" characteristic of the B-H loop. Because it is irreversible, hysteresis results in lost energy. The amount of energy lost is related to the area within the B-H loop traversed.

Magnetically Soft Material: A magnetic material with a low coercivity.

Magnetomotive Force (MMF [Amp]): The magnetic field which induces a magnetic flux in a magnetic circuit. The total magnetomotive force is the product of turns and current. Also, the product of Magnetic Field and coil length.

Mean Length Turn (MLT [cm; mm]): The average length of a single turn around the toroid. Values in this catalog are given for single layer coils. In multi-layer coils, the length of each successive layer is longer resulting in a longer average turn length.

Parasitic Capacitance (C_p [F]): Unintentional capacitance resulting from close physical proximity of two conductors. The copper comprising the wire is separated by its insulation from the core. The capacitance is proportional to area (wire diameter) and inversely proportional to separation.

Permeability (μ): The extent to or ease with which a material can be magnetized, often expressed as the parameter relating the magnetic flux density B induced by an applied magnetic field intensity H, as $B = \mu H$. The "absolute" permeability of a given material is expressed as the product of its relative permeability μ_r (a dimensionless constant) and the free space constant μ_o.

TERMINOLOGY

Permeability, amplitude (μ_a): The quotient of the peak value of flux density and peak value of applied field strength at a stated amplitude of either, with no static field present.

Permeability, incremental ($\mu\Delta$): This is the permeability derived from the incremental difference of B and H ($\Delta B/\Delta H$), as given by a small ac signal with a static field, or bias, present. Also, minor loop permeability.

Permeability, effective (μ_e): For a magnetic circuit constructed with an air gap(s), the permeability of a hypothetical homogeneous material which would provide the same reluctance.

Permeability, Free Space (μ_o): The permeability of free space, a constant.

Permeability, initial (μ_i): This is the permeability of an initially de-gaussed core driven with a small signal (2<B<10 Gauss typical) such that the permeability of a minor loop centered on the origin is measured. The drive level is specified as < 10 Gauss, and is such that the minor loop is "inside" the major loop. Note that the (amplitude) permeability initially increases with increasing field strength.

Permeability, Pulse (μP): Under stated conditions, permeability obtained from the ratio of the rate of change in flux density to the rate of change in applied field strength of the pulse field.

Power Loss Density (P [mW/cm³; kw/m³]): The power absorbed by a body of ferromagnetic material and dissipated as heat when the body is subjected to an alternating field, which results in a measurable temperature rise. The total loss is divided by the volume of the body.

Quality Factor (Q): The ratio of energy stored to energy lost (reactance to resistance). For a series LR circuit, Q is $\omega L/R$. For a parallel LR circuit, Q is $R/\omega L$.

Remanence (Br [Gauss; Tesla]): The flux density remaining in a magnetic material when the applied field strength is reduced to zero.

Resistance: A measure of the degree to which an object opposes the passage of an electrical current resistance defined as:

$$R = \frac{V}{I}$$

where V = voltage, I = current.
At Oe bins levels resistance is also

$$R = \frac{\vartheta r}{A}$$

where ϑ = length of conductor, r = resistivity,
A = cross section area.

Resistivity (ρ): The intrinsic property measured in ohm-cm that quantifies a material's opposition to free electron motion. Resistivity is the reciprocal property to conductivity. The resistance of a homogeneous material of uniform cross section A and length l can be found by:

$$R = \frac{\vartheta r}{A}$$

Rise Time (τ_r [sec]): Rise time of a square pulse is defined as the shortest time required for the voltage level to change from a "low" state to a "high" state. Time is customarily measured between voltage levels 10% and 90% of the "high" amplitude.

Saturation: The point at which the flux density B in a magnetic material does not increase with further applications of greater magnetization force H. At saturation, the slope of a materials's B-H characteristic curve becomes extremely small, with the instantaneous permability approaching that of free space(relative permeability = 1.0)

Saturation Flux Density (B_s [Gauss; Tesla]): The maximum intrinsic induction possible in a material. This is the flux level at which additional H-field produces no additional B-field.

Single-Layer Winding: A winding for toroidal cores which will result in the full utilization of the inside circumference of the core without overlapping turns. Both the wire gauge and the thickness of the insulation will effect the number of turns which will fit on a single-layer winding.

Square Mils (mils²): The cross sectional area of a circular conductor calculated as a circle, ie, area is πr^2, where r is in mils. See also "Circular Mils."

Temperature Coefficient (T.C.): The normalized change of the quantity considered (inductance, for instance), divided by the difference in temperature producing it.

Turns Ratio: The ratio of the number of turns on the primary to the number of turns on the secondary.

Volt Second Product (ET [V_s]): The ET product is a parameter used to measure the transformer's ability to maintain and support a pulse signal without saturating the core. It is determined as the product of the voltage applied at the primary and the time required for the magnetizing current to reach 1.5 times its linear value. Values for ET are dependent on the core geometry, core material, and the number of turns on the winding.

Volume Resistivity (ρ [Ohm-cm]): The resistance measured by means of direct voltage of a body of ferromagnetic material having a constant cross-sectional area.



USA: +1.866.928.8181
Europe: +49.8031.24600
Asia: +86.755.2714.1166

www.laird.com

NOTICE

Laird Technologies' products or subcomponents are not specifically designed or tested by Laird Technologies for use in any medical applications, surgical applications, medical device manufacturing, or any similar procedure or process requiring approval, testing, or certification by the United States food and drug administration or other similar Governmental entity. Applications with unusual environmental requirements such as military, medical, life-support or Life-sustaining equipment are specifically not recommended without additional testing for such application.

MCP-CAT-TOROID-BALuN-CORES 0617

Any information furnished by Laird Technologies, Inc. and its agents is believed to be accurate and reliable. All specifications are subject to change without notice. Responsibility for the use and application of Laird Technologies materials rests with the end user. Laird Technologies makes no warranties as to the fitness, merchantability, suitability or non-infringement of any Laird Technologies materials or products for any specific or general uses. Laird Technologies shall not be liable for incidental or consequential damages of any kind. All Laird Technologies products are sold pursuant to the Laird Technologies' Terms and Conditions of sale in effect from time to time, a copy of which will be furnished upon request. © Copyright 2020 Laird Technologies, Inc. All Rights Reserved. Laird, Laird Technologies, the Laird Technologies Logo, and other marks are trade marks or registered trade marks of Laird Technologies, Inc. or an affiliate company thereof. Other product or service names may be the property of third parties. Nothing herein provides a license under any Laird Technologies or any third party intellectual property rights. Version A01