G-INESR-M25-M68N-NEPDS-S - Cable gland

1415193

https://www.phoenixcontact.com/us/products/1415193

Please be informed that the data shown in this PDF document is generated from our online catalog. Please find the complete data in the user documentation. Our general terms of use for downloads are valid.



Cable gland, material for screw connection: Brass, nickel-plated, application: Standard, external cable diameter 9 mm ... 17 mm, shielding: no, connecting thread: M25 x 1.5, color: silver, with external strain relief, with O-ring

Your advantages

- Weatherproof sealing material
- Halogen-free

Commercial data

Item number	1415193
Packing unit	5 pc
Minimum order quantity	5 pc
Sales key	BF68
Product key	BF7DEX
Catalog page	Page 698 (C-2-2019)
GTIN	4055626038216
Weight per piece (including packing)	120.22 g
Weight per piece (excluding packing)	115.45 g
Customs tariff number	74198090
Country of origin	DE

Technical data

Product properties

Product type	Cable screw gland
Application	Standard
No. of conductors	1
Type	with external strain relief
Manufacturer	WISKA
Manufacturer Designation	EMSKVZ 25
Shielded	no
Execution of the strain relief	B

Characteristics

Category of shock impact	6
Design, Strain relief	B

Dimensions

Dimensional drawing	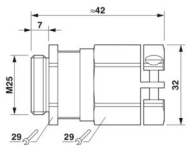
Length	42 mm
Length of the connecting thread	7 mm
Length without connecting thread	35 mm
Hole diameter	25.1 mm ... 25.2 mm
Wrench size, union nut	29 mm
Wrench size, support	29 mm
Clamping range of the strain relief clip	9.00 mm ... 17.00 mm
Hexagon angular dimension	32 mm
Thread type connection side	M25 x 1.5
Thread pitch	1.5 mm

Connection data

Tightening torque	10 Nm (Union nut: EN 62444)
	10 Nm (Support: EN 62444)
	0.4 Nm (Screw for clip)

Material specifications

Color	Brass
Material Compression ring	PA
Seal material O-ring	EPDM
Seal material Cable seal	EPDM

Material for screw connection	Brass, nickel-plated

Cable/line

External cable diameter Cable 1	9 mm ... 17 mm
External cable diameter	7.5 mm ... 11.3 mm (for UL 514 B)
Halogen-free	yes

Environmental and real-life conditions

Ambient conditions

Degree of protection	IP68 (5 bar / 0.5 h)
	IP69 (DIN EN 60529 / IEC 60529)
Ambient temperature (operation)	-40 °C ... 100 °C (static)

Drawings

Dimensional drawing

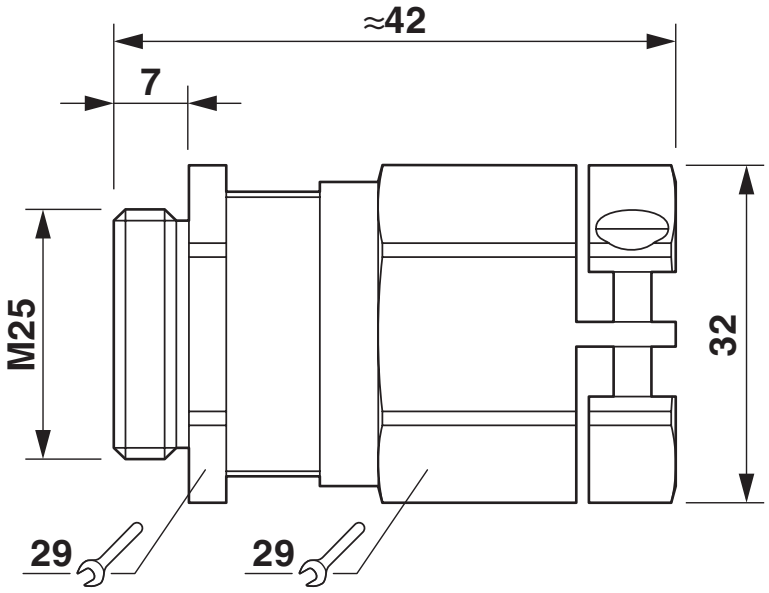

Approvals

To download certificates, visit the product detail page: https://www.phoenixcontact.com/us/products/1415193

cUL Recognized
Approval ID: E179850

UL Recognized
Approval ID: E179850

GOST-R
Approval ID: POCC DE.A*98.H12052

cULus Recognized

Classifications

ECLASS

ECLASS-11.0	27144432
ECLASS-12.0	27140801
ECLASS-13.0	27140801

ETIM

ETIM 9.0	EC000441

UNSPSC

UNSPSC 21.0	39121300

Environmental product compliance

EU RoHS

Fulfills EU RoHS substance requirements	Yes
Exemption	6(c)

China RoHS

Environment friendly use period (EFUP)	EFUP-50
	An article-related China RoHS declaration table can be found in the download area for the respective article under "Manufacturer declaration". For all articles with EFUP-E, no China RoHS declaration table issued and required.

EU REACH SVHC

REACH candidate substance (CAS No.)	Lead(CAS: 7439-92-1)
SCIP	ae423f35-29fd-48a8-a700-e09c4da940bf

Accessories

A-INL-M25-N-S - Counter nut

1411243

https://www.phoenixcontact.com/us/products/1411243

Counter nut, for threads M25 x 1.5, color: silver



Phoenix Contact 2024 © - all rights reserved
https://www.phoenixcontact.com

Phoenix Contact USA
586 Fulling Mill Road
Middletown, PA 17057, United States
(+717) 944-1300
info@phoenixcon.com