# GT7 Series

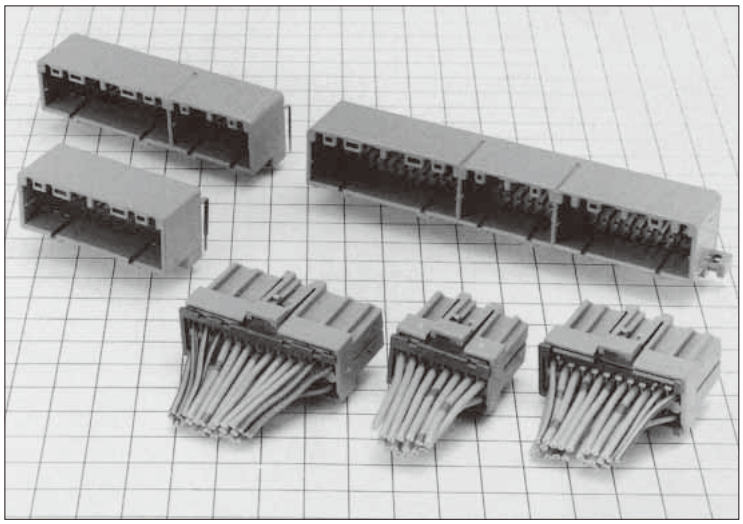

## Features

- These automotive crimp terminals are equivalent to 040 and 070 tab width items.
- The contact point of the F connector side has been given a double structure to make these connectors compatible with low insertion force and high contact pressure at the time of coupling.

Mar.1.2024 Copyright 2024 HIROSE ELECTRIC CO., LTD. All Rights Reserved.

Mar.1.2024 Copyright 2024 HIROSE ELECTRIC CO., LTD. All Rights Reserved.



# ■ F Connectors

## ● Terminals



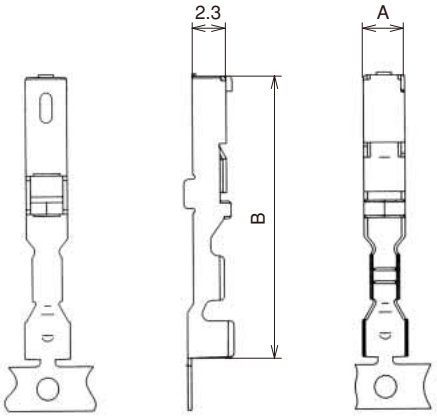


| Part No. | HRS No. | Material | Plating | Conductor Size (AWG) | Outer Diameter | A Dimension | B Dimension | Packaging | RoHS |
|---|---|---|---|---|---|---|---|---|---|
| GT7-2022SCF(70) | 757-0001-1 70 | Copper palloy | Tin plating | 20 to 22 AWG | ϕ1.4 to 2.4 | 2.8 | 19 | 5,000 pcs/reel | YES |
| GT7A-2022SCF(70) | 757-0003-7 70 | | | | ϕ2.6 to 3.1 | | | 3,000 pcs/reel | |
| GT3-2024SCF(70) | 753-0006-0 70 | | | 20 to 24 AWG | ϕ1.4 to 2.4 | 2.3 | 18.2 | 5,000 pcs/reel | |

Note 1: Sold in reel.
Note 2: This component is used only with applicable HRS housings.

## ● Housing 16 Pos.

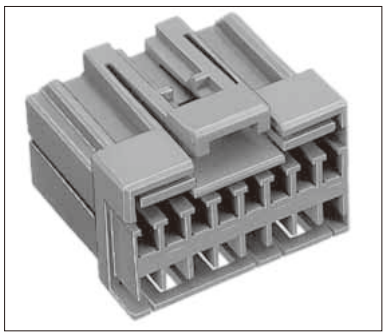

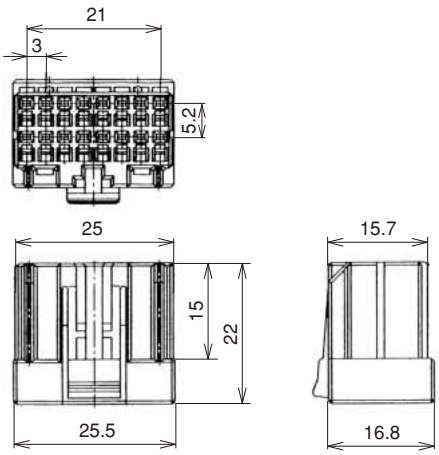


| Part No. | HRS No. | Color | Material | Packaging | RoHS |
|---|---|---|---|---|---|
| GT7-16DS-HU | 757-0008-0 | Light Gray | PBT | 1 | YES |

## ● Retainer (Only for GT7-16DS-HU)



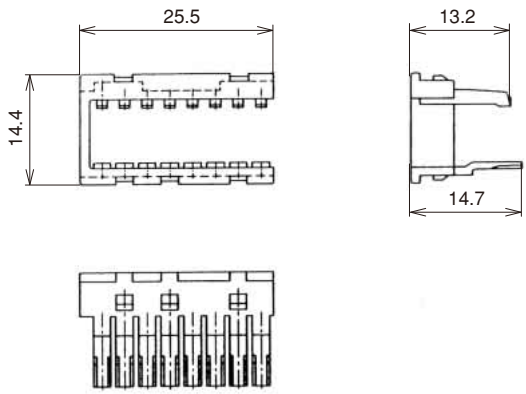


| Part No. | HRS No. | Color | Material | Packaging | RoHS |
|---|---|---|---|---|---|
| GT7-16R | 757-0010-2 | Dark Gray | PBT | 1 | YES |

## ● Housing 22 Pos.

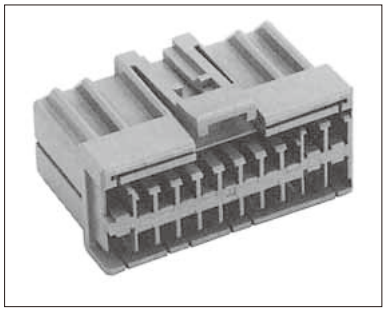

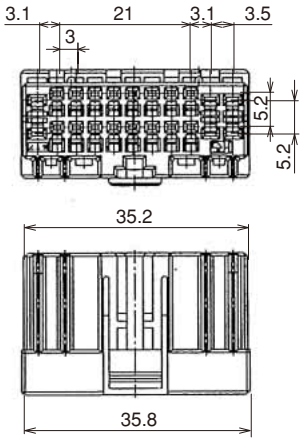


| Part No. | HRS No. | Color | Material | Packaging | RoHS |
|---|---|---|---|---|---|
| GT7-22DS-HU | 757-0015-6 | Light Gray | PBT | 1 | YES |

## ● Retainer (Only for GT7-22DS-HU)

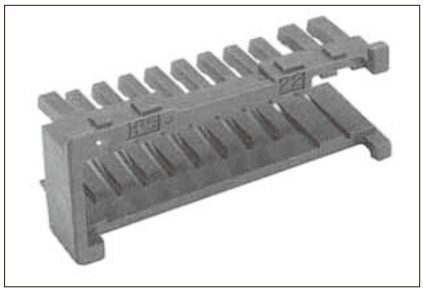

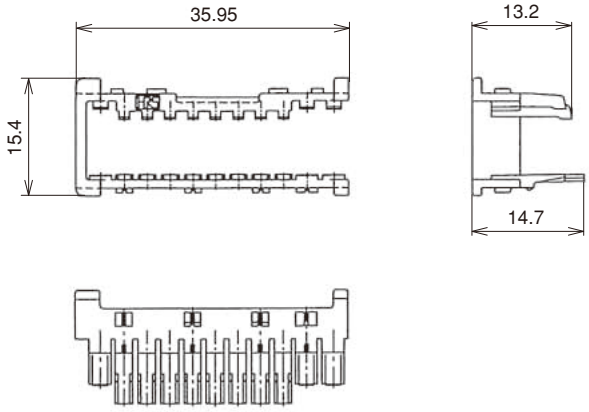


| Part No. | HRS No. | Color | Material | Packaging | RoHS |
|---|---|---|---|---|---|
| GT7-22R | 757-0016-9 | Dark Gray | PBT | 1 | YES |

## ● Housing 26 Pos.

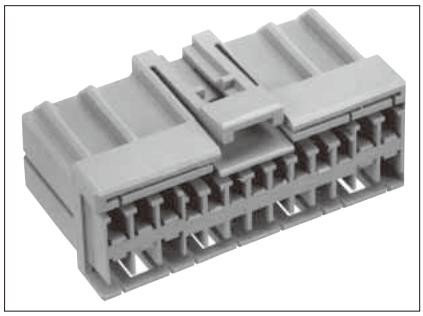

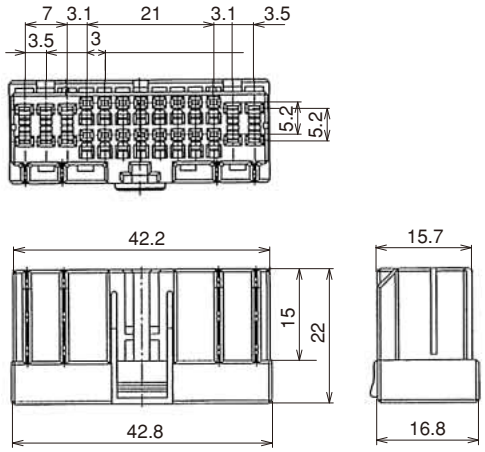


| Part No. | HRS No. | Color | Material | Packaging | RoHS |
|---|---|---|---|---|---|
| GT7-26DS-HU | 757-0009-3 | Light Gray | PBT | 1 | YES |

## ● Retainer (Only for GT7-26DS-HU)

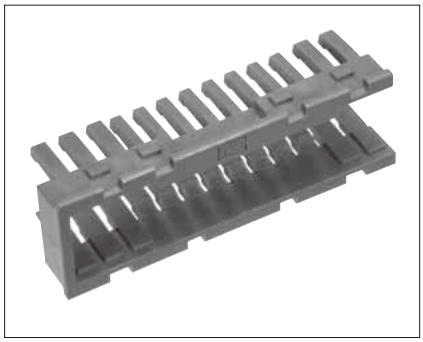

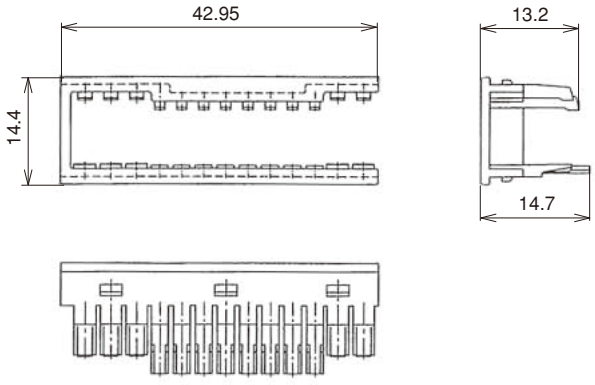


| Part No. | HRS No. | Color | Material | Packaging | RoHS |
|---|---|---|---|---|---|
| GT7-26R | 757-0011-5 | Dark Gray | PBT | 1 | YES |

Mar.1.2024 Copyright 2024 HIROSE ELECTRIC CO., LTD. All Rights Reserved.

Mar.1.2024 Copyright 2024 HIROSE ELECTRIC CO., LTD. All Rights Reserved.



# ■ M Connectors

## ● Board Type 26 Pos.

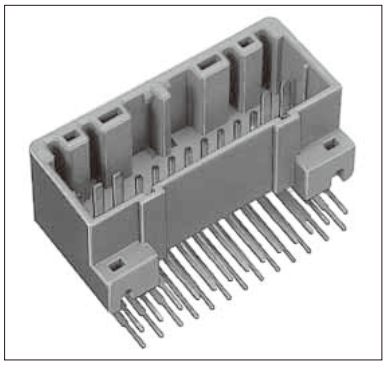

Mates with a 26-pos. F connector.

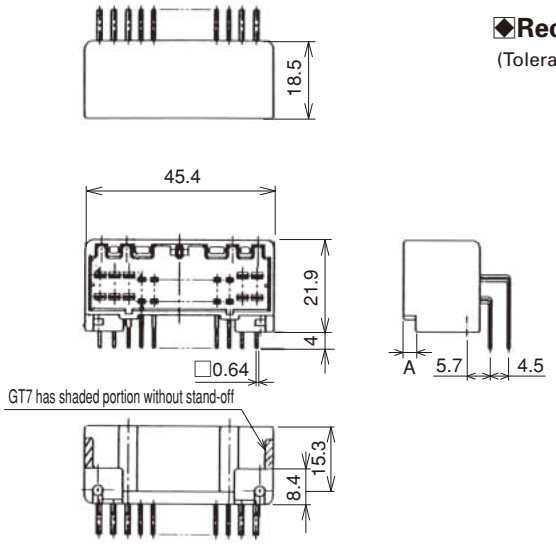


### ◆Recommended PCB pattern

(Tolerance of unmarked values is ±0.05.)

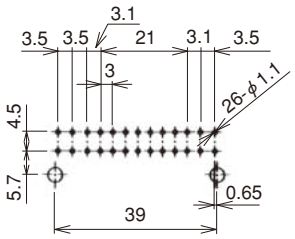


| Part No. | HRS No. | Material/Plating or Color | A Dimension | Packaging | RoHS |
|---|---|---|---|---|---|
| GT7A-26DP-DS(70) | 757-0014-3 70 | Housing：PBT／Light Gray | 3 | 1 | YES |
| GT7-26DP-DS(70) | 757-0006-5 70 | Terminal：Brass／Tin plating | Shaded portion without stand-off | | |

## ● Board Type / Hybrid Type

**42 Pos. (26pos.+16pos.)**

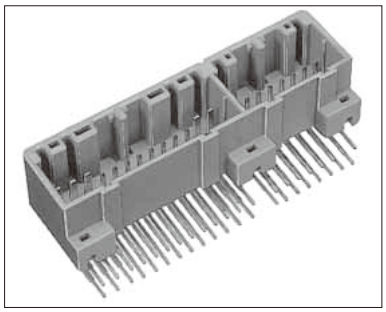

Mates with a 26-pos. + 16-pos. F connector.

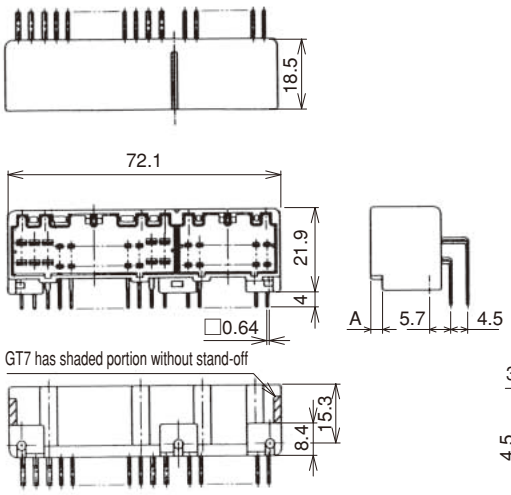


### ◆Recommended PCB pattern

(Tolerance of unmarked values is ±0.05.)

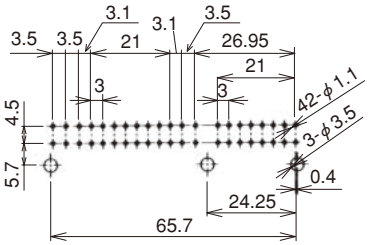


| Part No. | HRS No. | Material/Plating or Color | A Dimension | Packaging | RoHS |
|---|---|---|---|---|---|
| GT7A-42DP-DS(70) | 757-0013-0 70 | Housing：PBT／Light Gray | 3 | 1 | YES |
| GT7-42DP-DS(70) | 757-0007-8 70 | Terminal：Brass／Tin plating | Shaded portion without stand-off | | |

## ● Board Type / Hybrid Type

**64 Pos.**



Mates with a 26-pos. + 16-pos. + 22-pos. F connector.

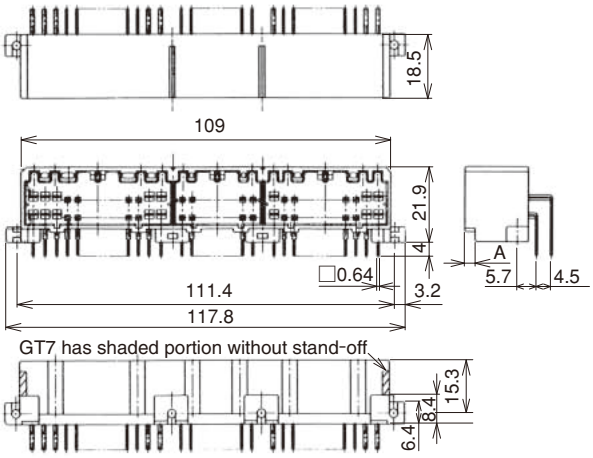


### ◆Recommended PCB pattern

(Tolerance of unmarked values is ±0.05.)

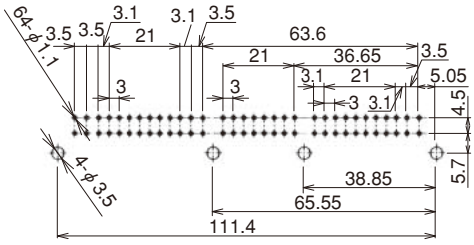


| Part No. | HRS No. | A Dimension | Packaging | RoHS |
|---|---|---|---|---|
| GT7A-64DP-DS(70) | 757-0012-8 70 | 3 | 1 | YES |
| GT7-64DP-DS(70) | 757-0005-2 70 | Shaded portion without stand-off | | |

## ◆Crimping tools

User manuals are available. Please ask your Hirose Electric account representative.

### Automatic Crimping Machine

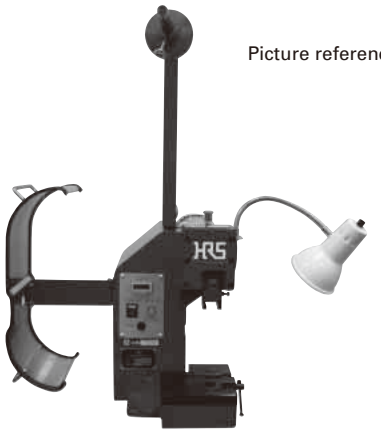


Picture reference only

Part No. CM-105C

### Specifications

| Item | Specification | Remarks |
|---|---|---|
| Press capacity | 1.5ton | |
| Stroke Length | 30mm | |
| Number of strokes | 200spm(50 Hz) | 240spm(60 Hz) |
| Weight | 75 kg | |
| Motor | 0.2kw | AC100V |
| Crimping speed | 2,000 to 4,000 pcs/hour | |

### ●Harness tool

| Terminal Part No. | Terminal HRS No. | Tool Part No. | Tool HRS No. |
|---|---|---|---|
| GT7-2022SCF(70) | 757-0001-1 70 | AP 105-GT7-2022 | 901-5004-9 |
| GT7A-2022SCF(70) | 757-0003-7 70 | AP 105-GT7A-2022 | 901-5039-3 |

*Crimp height setting tables are available for each cable type.
Please contact your nearest Hirose Electric account representative.
Different cables will require different crimp height settings.

Mar.1.2024 Copyright 2024 HIROSE ELECTRIC CO., LTD. All Rights Reserved.