Data sheet

Keystone wall outlet flush mounted without cover 2 port unequipped

P/N 130B20D21200KE

EAN 4250184157717

2023/05/31

Version: S

Illustrations

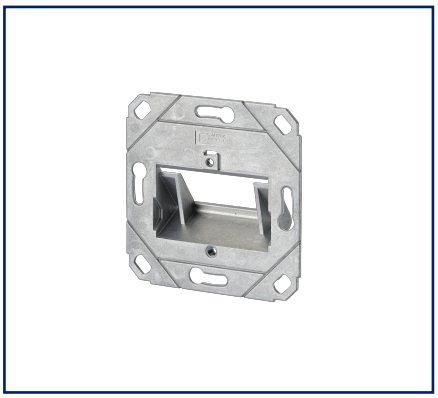

Dimensional drawing

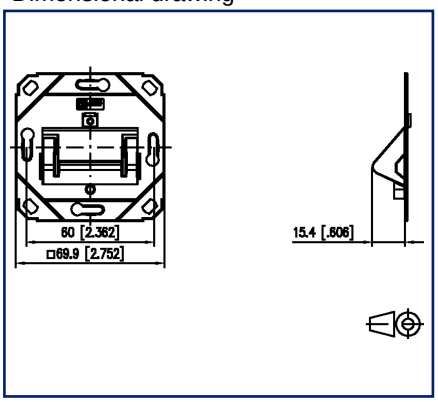

Drill pattern

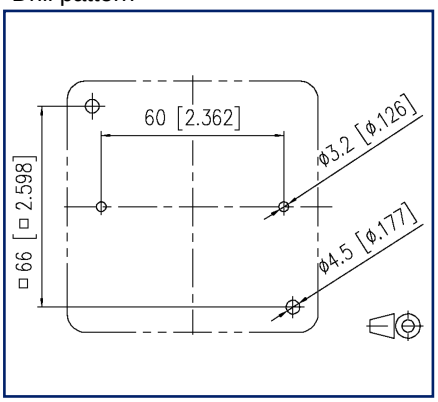

See enlarged drawings at the end of document

Product specification

- termination unit for individual modules in Keystone design
- module plug direction 45° downwards
- strain relief on the module
- without cover parts
- compatible with design central units of switch lines
- variants: 1 port, 2 ports, 3 ports

METZ CONNECT GmbH | Im Tal 2 | 78176 Blumberg | Germany
Phone +49 7702 533-0 | Fax +49 7702 533-433
Weitere Dokumentation siehe / additional documentation see / documentation supplémentaire voir www.metz-connect.com

© 2023 METZ CONNECT - Technische Änderungen vorbehalten! Subject to modifications! Sous réserve de modifications techniques!

Data sheet

Keystone wall outlet flush mounted without cover 2 port unequipped

P/N 130B20D21200KE

EAN 4250184157717

2023/05/31

Version: S

Technical Data

General Data	
Fields of application	office areas
Mechanical measurement according to MICE	M1
Ingress measurement according to MICE	I1
Climatic measurement according to MICE	C1
Electromagnetic measurement according to MICE	E3
Design	wall outlet
Mounting style	UP0
Color	metallike
Dimensions	
Dimension (L x W x H)	15.4 mm x 69.9 mm x 69.9 mm
Dimension (L x W x H)	0.606 in. x 2.752 in. x 2.752 in.

Connections/interfaces	
Number of ports interface 2	2
Number of ports interface 2 equipped	0
Module plug-in direction	45° downwards

Mechanical data	
Cut-out	Keystone
strain relief	attached to module

Materials and material properties	
Material - Supporting frame	GD-Zn (zinc die-cast)
Halogen free	yes
RoHS	compliant

Classifications	
ETIM 5.0	EC001264
ETIM 6.0	EC001264
ETIM 7.0	EC001264
ETIM 8.0	EC001264
ETIM 9.0	EC001264

© 2023 METZ CONNECT - Technische Änderungen vorbehalten! Subject to modifications! Sous réserve de modifications techniques!

Data sheet

Keystone wall outlet flush mounted without cover 2 port unequipped

P/N 130B20D21200KE

EAN 4250184157717

2023/05/31

Version: S

Technical Data

Packing details	
Type of packaging	10 pc(s) / box
Packaging unit - Weight (gram)	597 g
Packaging unit - Weight (pound)	1.32 lb
Packaging dimension	240 mm x 170 mm x 140 mm
Packaging dimension	9.449 in. x 6.693 in. x 5.512 in.

© 2023 METZ CONNECT - Technische Änderungen vorbehalten! Subject to modifications! Sous réserve de modifications techniques!

Data sheet

Keystone wall outlet flush mounted without cover 2 port unequipped

P/N 130B20D21200KE

EAN 4250184157717

2023/05/31

Version: S

Accessories

P/N	Designation
130829-01-I	Surface mount frame 85 x 85 x 35 mm - single, pearl white
130829-02-I	Surface mount frame 85 x 85 mm - Single, pure white
130829-4301-I	Surface mount frame 85 x 85 x 43 mm - single, pearl white
130829-4302-I	Surface mount frame 85 x 85 x 43 mm - single, pure white
130829-4327-I	Surface mount frame 85 x 85 x 43 mm - single, traffic white
1308895010-I	T-Slot mounting bracket for wall outlets - horizontal mounting without 50 mm, separation cup
1308895011-I	T-Slot mounting bracket for wall outlets - horizontal mounting 50 mm, with separation cup
1308895020-I	DIN Rail mounting bracket for wall outlets - horizontal mounting 50 mm, without separation cup
1308895021-I	DIN Rail mounting bracket for wall outlets - horizontal mounting 50 mm, with separation cup
1308895040-I	T-Slot mounting bracket for wall outlets - vertical mounting 50 mm, without separation cup
1308895041-I	T-Slot mounting bracket for wall outlets - vertical mounting 50 mm, with separation cup
1308895220-I	DIN rail mounting bracket for wall outlets - horizontal mounting 52 mm, without separation cup
1308895221-I	DIN rail mounting bracket for wall outlets - horizontal mounting 52 mm, with separation cup
1308895510-I	T-Slot mounting bracket for wall outlets - horizontal mounting 55 mm, without separation cup
1308895511-I	T-Slot mounting bracket for wall outlets - horizontal mounting 55 mm, with separation cup
1308895520-I	DIN rail mounting bracket for wall outlets - horizontal mounting 55 mm, without separation cup
1308895521-I	DIN rail mounting bracket for wall outlets - horizontal mounting 55 mm, with separation cup
1308895540-I	T-Slot mounting bracket for wall outlets - vertical mounting 55 mm, without separation cup
1308895541-I	T-Slot mounting bracket for wall outlets - vertical mounting 55 mm, with separation cup
130889ADTK-I	Mounting bracket ADTK for OBO
130889ADTSA-I	Mounting bracket ADTSA for OBO
130889FKH-I	Mounting bracket FR for Kleinhuis
130889FNI-I	Mounting bracket FR for Niedax
130889FTE-I	Mounting bracket FR for Tehalit

© 2023 METZ CONNECT - Technische Änderungen vorbehalten! Subject to modifications! Sous réserve de modifications techniques!

Data sheet

Keystone wall outlet flush mounted without cover 2 port unequipped

P/N 130B20D21200KE

EAN 4250184157717

2023/05/31

Version: S

Accessories

820395-0101-I	Cover plate 80 x 80 mm, pearl white, module
820395-0102-I	Cover plate 80 x 80 mm, pure white, module
820395-0127-I	Cover plate 80 x 80 mm, traffic white, modul
860210-0202-I	Central plate 50 x 50 mm 2 port, pure white, modul
860210-0227-I	Central plate 50 x 50 mm 2 port, traffic white, modul
860210-02-I	Central plate 50 x 50 mm 2 port, pearl white, modul

© 2023 METZ CONNECT - Technische Änderungen vorbehalten! Subject to modifications! Sous réserve de modifications techniques!

METZ CONNECT
We realize ideas

Data sheet

Keystone wall outlet flush mounted without cover 2 port unequipped

P/N 130B20D21200KE
EAN 4250184157717
2023/05/31
Version: S

Illustrations

Dimensional drawing

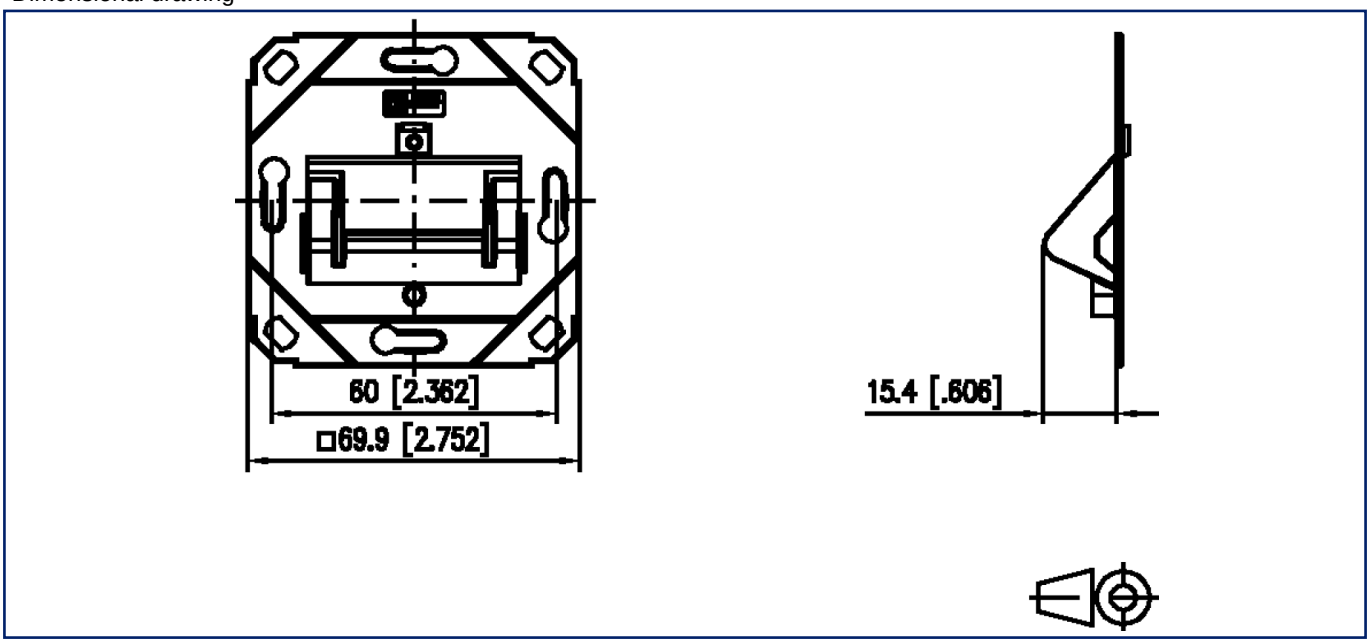

Drill pattern

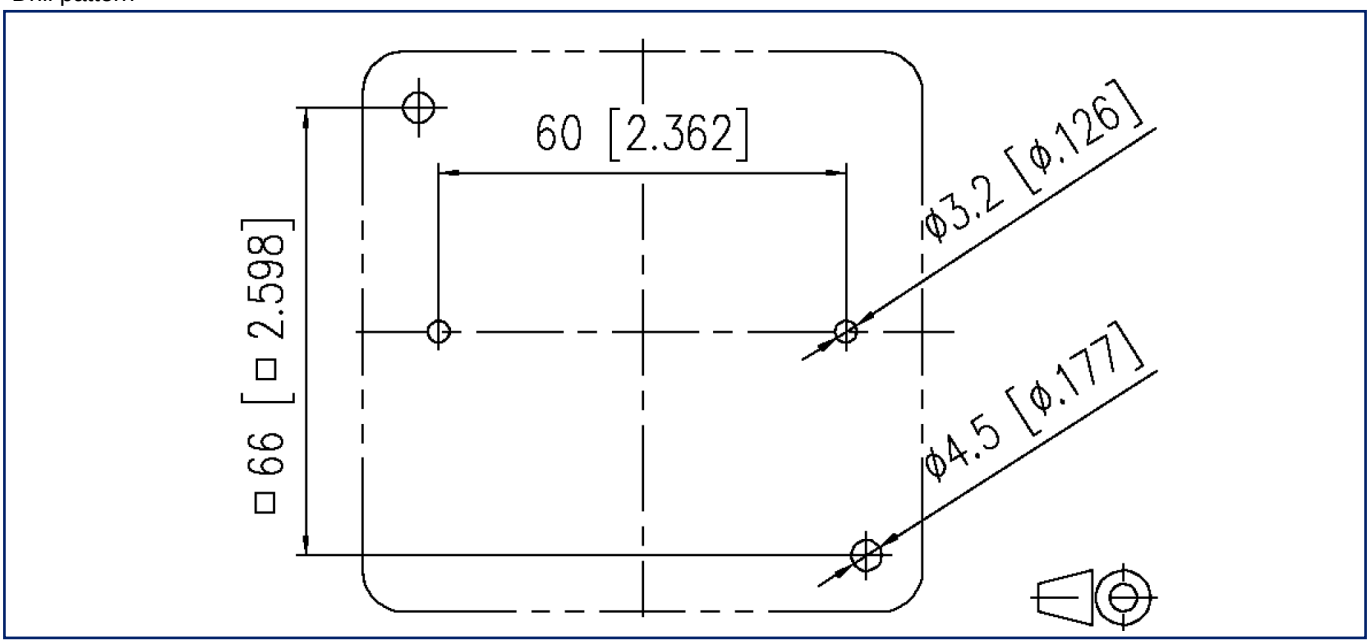

© 2023 METZ CONNECT - Technische Änderungen vorbehalten! Subject to modifications! Sous réserve de modifications techniques!