OWS-2879W50A-4

High power speaker

Small form factor and high power speaker.

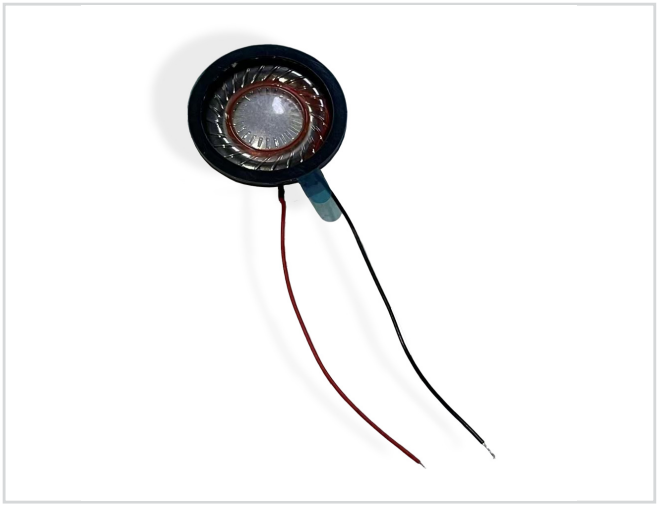

Characteristics

Size (ØxH) [mm]	28.0x7.9	
Sensitivity [dBSPL]	80.0±3 dB	1.0W/1.0m, free air
Impedance [Ω]	4	
Power [W]	2.0 / 3.0	nom / max, free air
F0 [Hz]	570	Free air
Termination	Lead wires	

Specifications are subject to change without prior notice. Upon request Ole Wolff can supply further specifications, simulation parameters etc.

Mechanical drawing

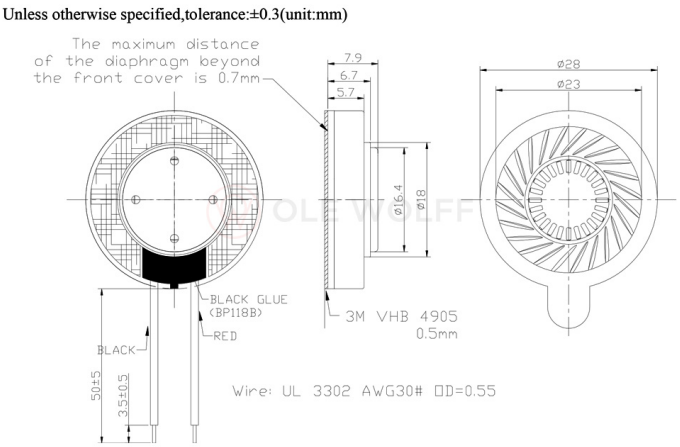

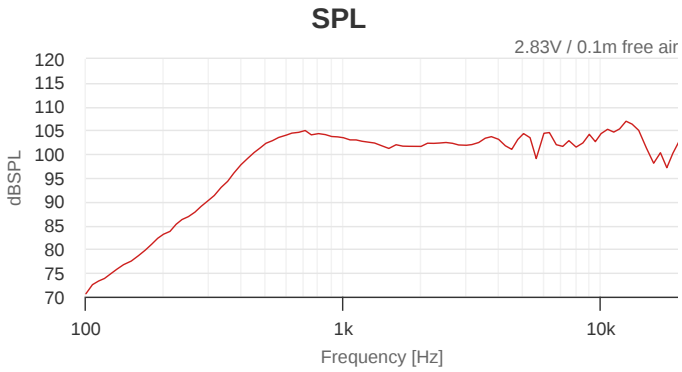

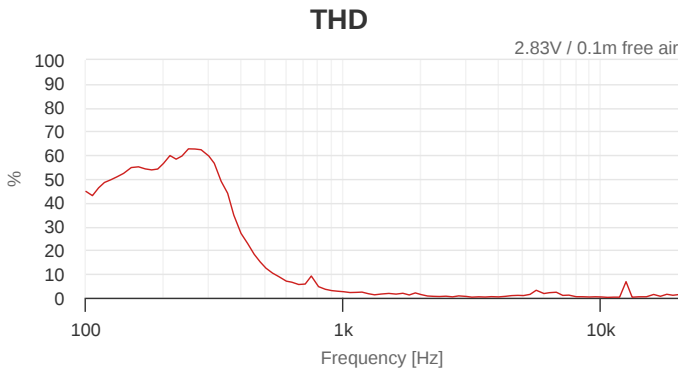

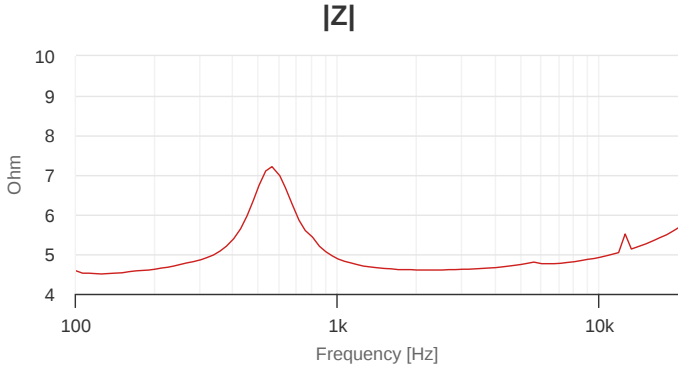

Ole Wolff Elektronik A/S, Roedengvej 14, 4180 Soroe, DK Denmark
T: +45 5783 3830 | sales@owolff.com