RoHS compliant
by exemption

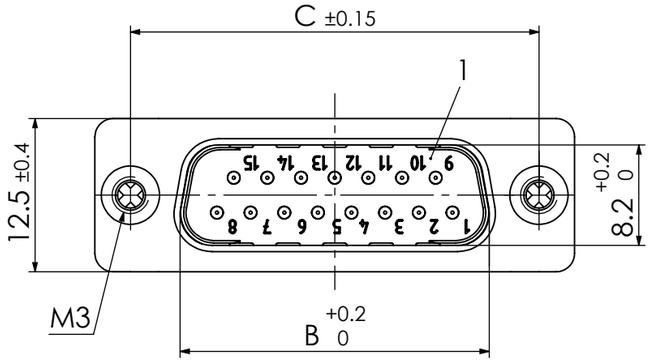

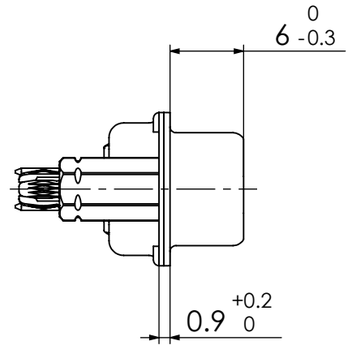

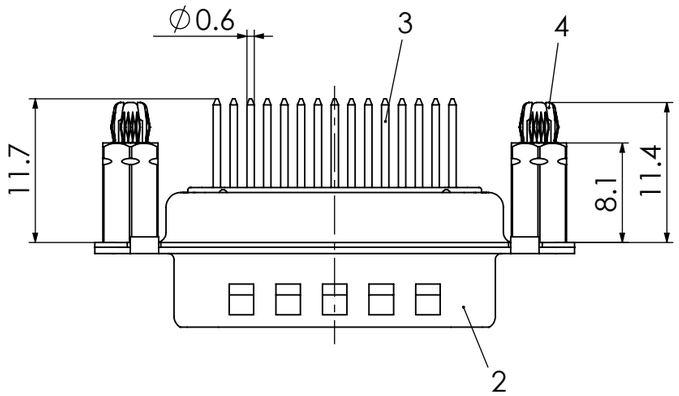

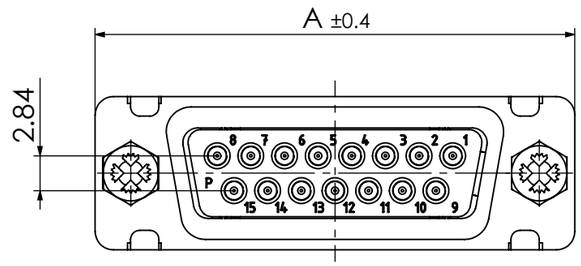

Fxx*1)P22Gy*2)-0904

e.g. F15P22G2-0904

*1) xx No. of contacts 09, 15, 25 or 37
*2) y for performance classes 1 or 2
(contact cycle for G1/G2 = 500/200)

MATERIAL NUMBER	xx *1)	y *2)	A [mm]	B [mm]	C [mm]	*E [mm]	*F [mm]
1731091977	09	2	30.8	16.9	25	ø1	ø3
1731090586	15	2	39.1	25.2	33.3		
1731090367	25	1	53	38.9	47.04		
1731092243	37	2	69.3	55.3	63.5		

*PCB hole patterns, øE see document AM0023 (2195600023)

No.	St.	Part	Type Description/Material	Surface plating/Colour/Class
4	2	Snap-in bolt	PCB 1.6mm / Brass	tin plated
3	xx	Signal contact	P22 / Brass	G1/G2
2	1	Shell	Steel	tin plated
1	1	Insulator	PBT (-55°C to +125°C) acc. UL94V-0	white

FUNCTIONAL SYMBOLS
E = 0
E = 0
E = 0

THIS DRAWING CONTAINS INFORMATION THAT IS PROPRIETARY TO MOLEX ELECTRONIC TECHNOLOGIES, LLC AND SHOULD NOT BE USED WITHOUT WRITTEN PERMISSION

DIMENSION UNITS: mm
SCALE: 2:1
MEASUREMENTS WITHOUT TOLERANCE ACC. TO: ISO 2768-mK

REV.	CH.-NO.
3	24410
2	24130
1	

CURRENT REVISION
DRWN: DRAWN BY msteinbrueck 22-10-2024
APPR: APPR BY mteubel 22-10-2024

INITIAL REVISION
DRWN: DRAWN BY Denzinger 08-07-2003
APPR: APPR BY aschiekofer 08-07-2003

molex

FCT D-Sub Miniature Connector

PRODUCT CUSTOMER DRAWING

MATERIAL NUMBER: see table
REVISION: 3

REPLACEMENT FOR: 1731091977_Rev. A
FRIST ANGLE PROJECTION
DRAWING: A3-SIZE
DOCUMENT NUMBER: FxxP22Gy-0904
CUSTOMER: GENERAL MARKET
SHEET NUMBER: 1 OF 1

COMMENT:
ALL RIGHTS ARE RESERVED BY US FOR THIS DRAWING, WITHOUT OUR PRIOR CONSENT, IT MAY NEITHER BE DUBLICATED NOR MADE AVAILABLE TO A THIRD PARTY, AND IT ALSO MAY NOT BE IMPROPERLY USED BY TE RECEIVER, OR A THIRD PARTY.

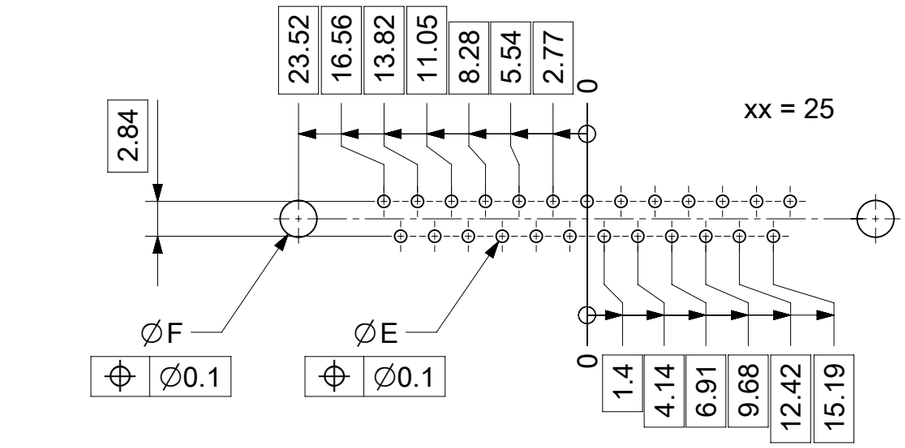

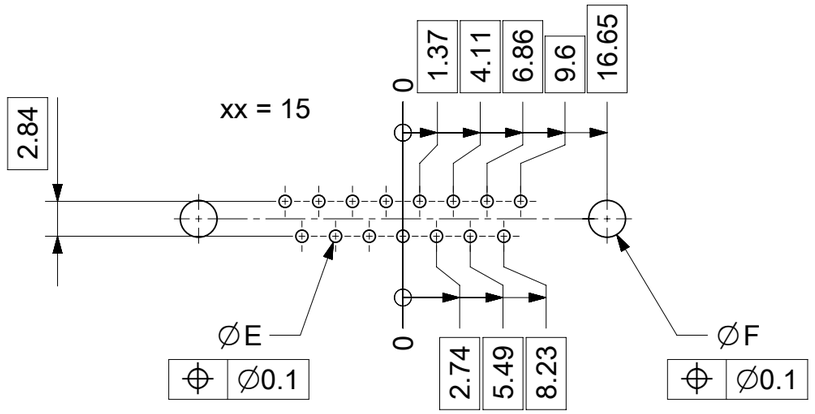

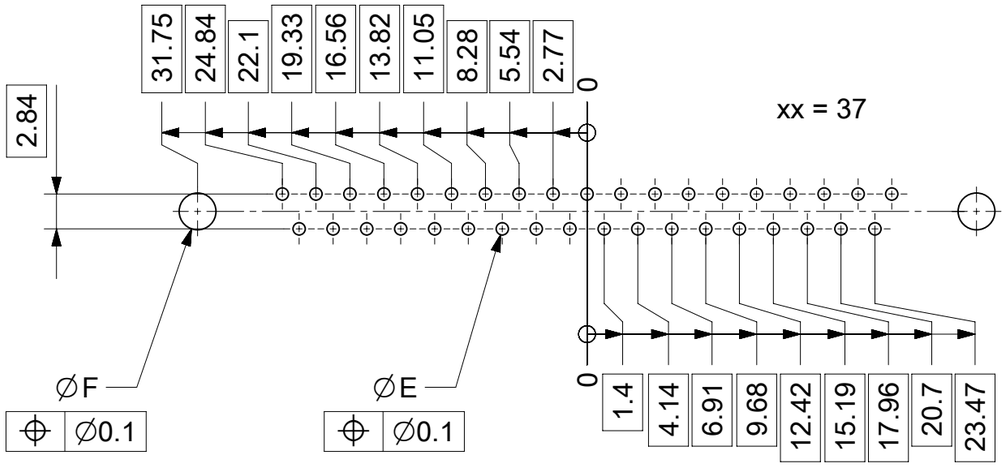

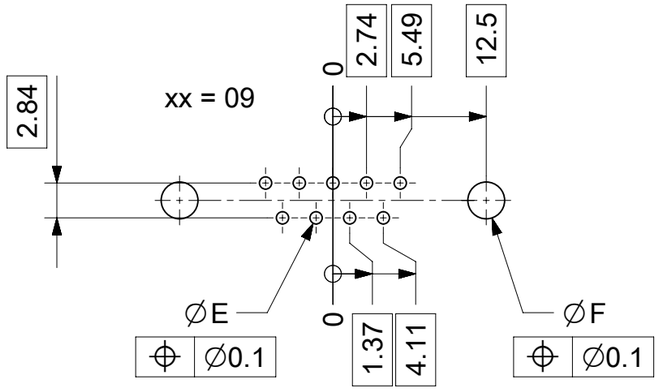

øE, øF see data sheet incl. connector
øF connectors with accessories only

MEASUREMENTS WITHOUT TOLERANCE ACC TO ISO 2768-m			REPLACEMENT FOR DOCUMENT NUMBER: AM0023
FUNCTIONAL SYMBOLS	THIS DRAWING CONTAINS INFORMATION THAT IS PROPRIETARY TO MOLEX ELECTRONIC TECHNOLOGIES, LLC AND SHOULD NOT BE USED WITHOUT WRITTEN PERMISSION		
= 0	DIMENSION UNITS: mm / SCALE: 2:1	CURRENT REV DESC:	molex
= 0	GENERAL TOLERANCES (UNLESS SPECIFIED)		FCT PCB HOLE PATTERN STRAIGHT CONTACT NO. OF CONTACTS 09-37
= 0	ANGULAR TOL ± °	EC NO: 713905	
	4 PLACES ±	DRWN: SKANDB 2022/05/16	
DIVISIONAL SYMBOLS	3 PLACES ±	CHK'D: MTEUBEL 2022/07/12	PRODUCT CUSTOMER DRAWING
	2 PLACES ±	APPR: MTEUBEL 2022/07/12	
	1 PLACE ±	INITIAL REVISION:	DOCUMENT NUMBER: 2195600023 / DOC TYPE: PSD / DOC PART: 000 / REVISION: A
	0 PLACES ±	DRWN: SKANDB 2022/05/16	
	DRAFT WHERE APPLICABLE MUST REMAIN WITHIN DIMENSIONS	APPR: MTEUBEL 2022/07/12	
		FIRST ANGLE PROJECTION / DRAWING: A3-SIZE / SERIES: 219560	MATERIAL NUMBER: 219560 / CUSTOMER: GENERAL MARKET / SHEET NUMBER: 1 OF 1

DOCUMENT STATUS	P1	RELEASE DATE	2022/07/12 08:25:55

FORMAT: master-Sheet-A3
REVISION: J1
DATE: 2021/05/05