EV8046DF-00A

High Current, Dual Channel Power Half-Bridge Evaluation Board

The Future of Analog IC Technology

GENERAL DESCRIPTION

The EV8046DF-00A is the evaluation board for the MP8046, a high current, dual channel power half-bridge. It accepts PWM modulated inputs for operation.

The MP8046 features a low current shutdown mode, standby mode, input under voltage protection, thermal shutdown and fault flag signal output. Each channel can be driven independently as stereo single-ended audio amplifiers, or driven complementary in a bridge-tied load (BTL) audio amplifier configuration. Both channels of the driver interface with standard logic signals. The MP8046 is available in a 20-pin TSSOP (with Exposed Pad) package.

ELECTRICAL SPECIFICATIONS

Parameter	Symbol	Value	Units
Supply Voltage	V_{DD}	7.5 – 26	V
Peak Output Current	I_{PEAK}	5	A

FEATURES

- ±5A Peak Current Output
- Up to 600kHz Switching Frequency
- Protected Integrated Power 150mΩ Switches
- 30ns Switch Dead Time
- All Switches Current Limited
- Under Voltage Protection
- Thermal Protection
- 4μA Quiescent Current at Shutdown
- Fault Output Flag
- Stereo Single-Ended: 21W/Channel, at V_{DD}=26V, 4Ω Load
- Bridge Tied-Load Output Power: 43W, at V_{DD}=26V, 8Ω Load

APPLICATIONS

- Class D Audio Drivers

"MPS" and "The Future of Analog IC Technology" are Registered Trademarks of Monolithic Power Systems, Inc.

EV8046DF-00A EVALUATION BOARD



(L x W x H) 4.1" x 3.6" x 1.1"
(10.2cm x 9.0cm x 2.8cm)

Board Number	MPS IC Number
EV8046DF-00A	MP8046DF

MPS Proprietary Information. Unauthorized Photocopy and Duplication Prohibited.
© 2013 MPS. All Rights Reserved.

EVALUATION BOARD SCHEMATIC

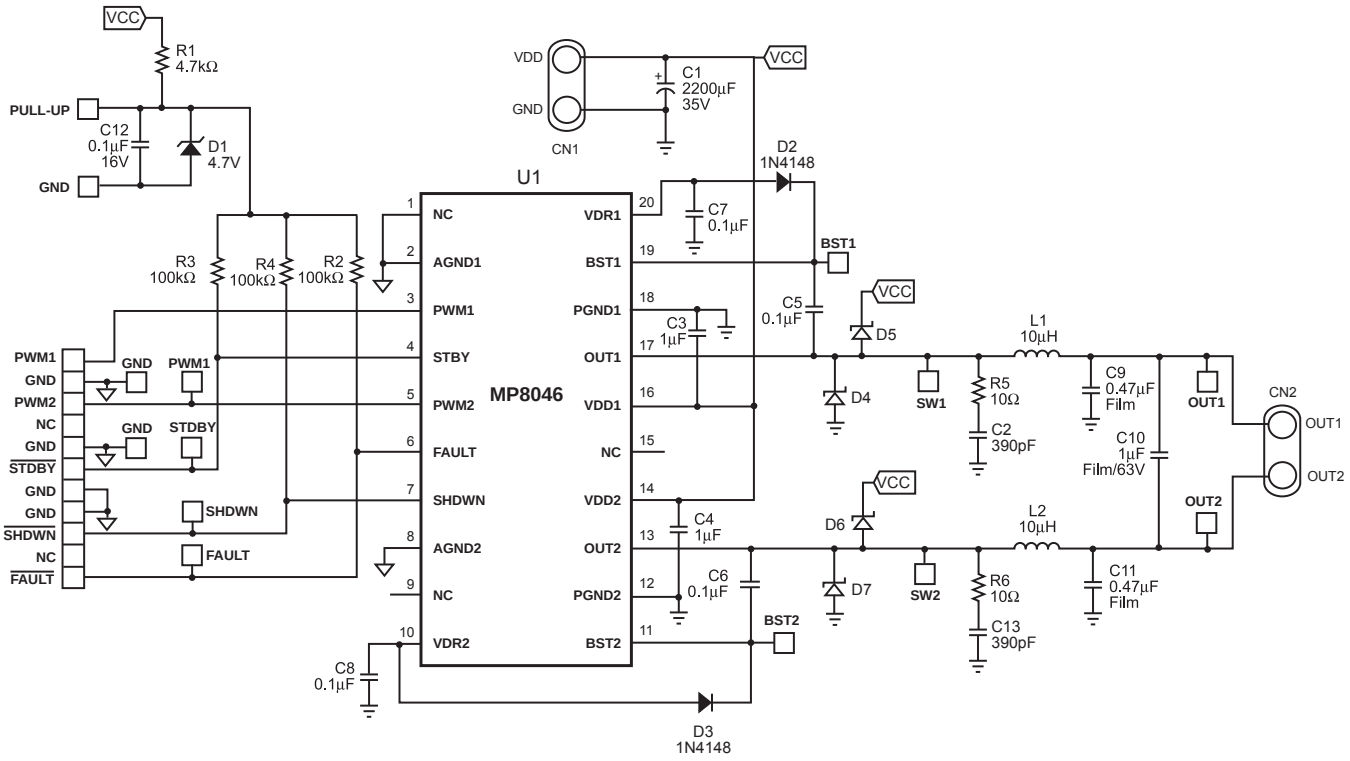

EV8046DF-00A BILL OF MATERIALS

Qty	RefDes	Value	Description	Package	Manufacturer	Manufacturer P/N
1	C1	2200uF	Electrolytic Cap., 35V, NHG	Radial	Panasonic	ECA-1VHG222
2	C2, C13	390pF	Ceramic Cap, X7R, 50V	0805	Panasonic	ECU-V1H391KBN
2	C3, C4	1uF	Ceramic Cap., 50V, X7R	1210	TDK	C3225X7R1H105K
2	C5, C6	0.1uF	Ceramic Cap., 50V, X7R	0805	TDK	C2012X7R1H104K
2	C7, C8	0.1uF	Ceramic Cap., 25V, X7R	1206	Panasonic	ECJ-3VB1E104K
2	C9, C11	0.47uF	Cap., 50V, Stack Metal Film	Radial	Panasonic	ECQ-V1H474JL
1	C10	1uF	Cap., 63V, Stack Metal Film	Radial	Panasonic	ECQ-V1J105JM
1	C12	0.1uF	Ceramic Cap., 16V, X7R	0603	TDK	C1608X7R1C104K
2	CN1		Banana Jacks, Red and Black			
2	CN2		2 Red Banana Jacks			
1	D1		Diode Zener, 4.7V, 200mW	SOD-323	Diodes Inc.	BZT52C4V7S-7
2	D2, D3		Diode Switch, 75V, 200mW	SOD-323	Diodes Inc.	1N4148WS-7
4	D4, D5, D6, D7		Diode Schottky, 30V, 1A	SMB	IR	MBRS130LTR
			Diode Schottky, 40V, 1A	SMA	Diodes Inc.	B140-13-F
2	L1, L2	10uH	Power Inductor, 7A, 16RHBP	Radial	Toko	16RHBP-100M
1	R1	4.7k	Film Res., 5%	0603	Panasonic	ERJ-3GEYJ472V
3	R2, R3, R4	100k	Film Res., 5%	0603	Panasonic	ERJ-3GEYJ104V
2	R5, R6	10Ω	Ceramic Res, 5%	0805	Panasonic	ERJ-6GEYJ100V
29			29-Pins Sip Header, 0.1"		Keystone	5000
1	U1		Class D Amplifier	TSSOP-20	MPS	MP8046DF-R10

MPS Proprietary Information. Unauthorized Photocopy and Duplication Prohibited.
© 2013 MPS. All Rights Reserved.

PRINTED CIRCUIT BOARD LAYOUT

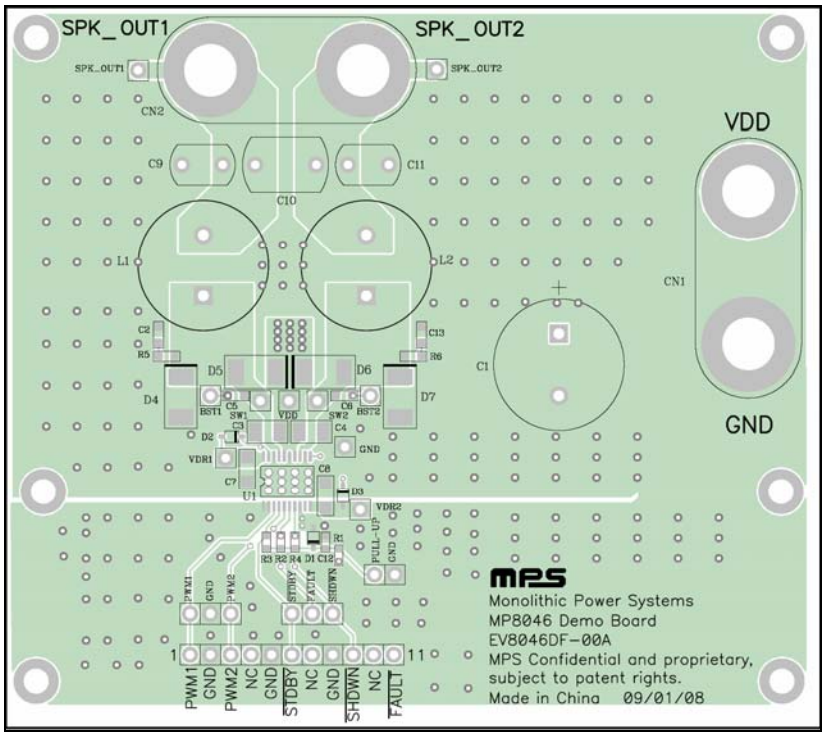

Figure 1—Top Silk Layer

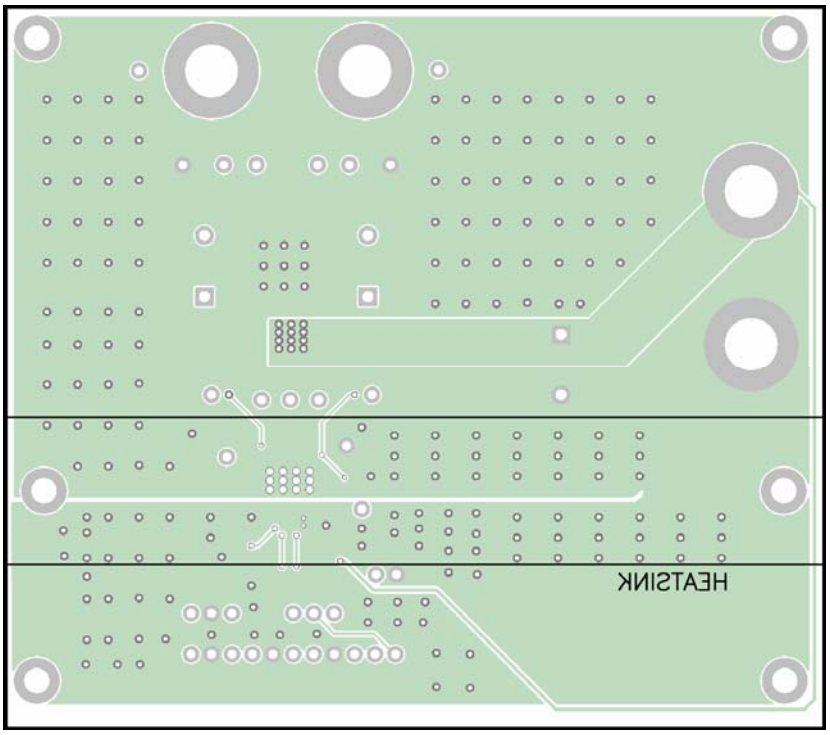

Figure 2— Bottom Silk Layer

MPS Proprietary Information. Unauthorized Photocopy and Duplication Prohibited.
© 2013 MPS. All Rights Reserved.

QUICK START GUIDE

The EV8046DF-00A comes pre-configured to operate as a BTL (Bridge-Tied Load) audio power driver, where a complementary PWM modulated audio signal (PWM and $\overline{PWM}$) is used an input, and music is played to a speaker connected to the output. For BTL operation, follow the steps in the Quick Start Guide for BTL Operation section. For Single-Ended operation, make modifications and follow the steps as described in the Quick Start Guide for Single-Ended Operation section.

Quick Start Guide for BTL (Bridge-Tied Load) Operation

Input/Output Requirements

1. Power supply: 7.5V to 26V.
2. Complementary PWM Signal Source (PWM, $\overline{PWM}$).
3. Speaker Load: 8Ω.

Setup Condition for Operation

4. Connect the speaker between SPK_OUT1 and SPK_OUT2 terminals.
5. Connect a PWM signal source to PWM1 and the complementary signal source $\overline{PWM}$ to PWM2, respectively. Use the GND terminal between PWM1 and PWM2 as the ground connection for the PWM inputs.
6. Apply power to the board.
7. Audio should be heard through the speaker.

Quick Start Guide for SE (Single-Ended) Operation

Input/Output Requirements

1. Power supply: 7.5V to 26V.Stereo PWM Signal Source.
2. Two Speaker Loads: 4Ω or 8Ω each.

Setup Condition for Operation

3. Remove C10 and connect the speakers as shown in Figure 3.
4. Connect the stereo PWM signal source to the EV board. Connect channel 1 to PWM1 and channel 2 to PWM2, respectively. Use the GND terminals between PWM1 and PWM2 as the ground connections for the PWM inputs.
5. Apply power to the board.
6. Audio should be heard through the speakers.

MPS Proprietary Information. Unauthorized Photocopy and Duplication Prohibited.
© 2013 MPS. All Rights Reserved.

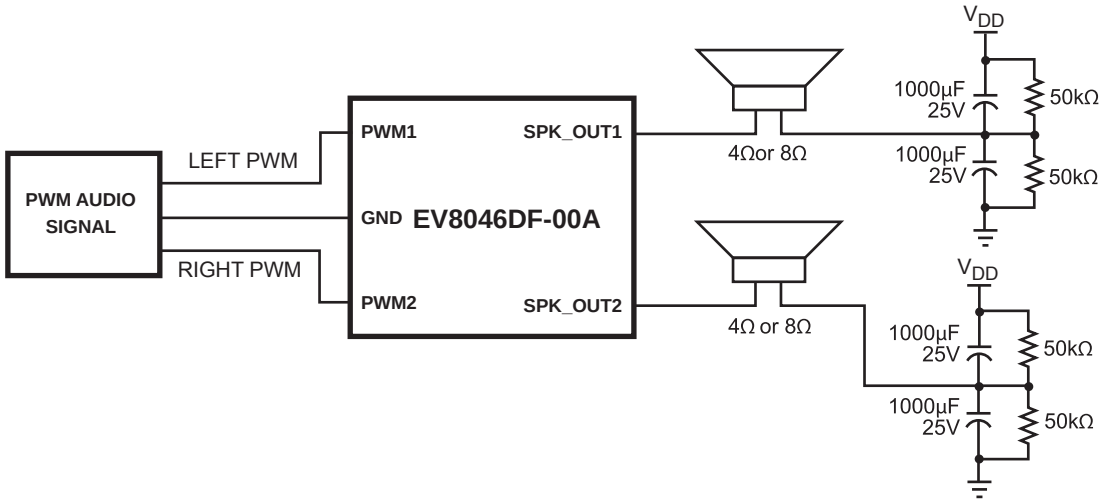

Figure 3—Setup for Single-Ended Operation

NOTICE: The information in this document is subject to change without notice. Please contact MPS for current specifications. Users should warrant and guarantee that third party Intellectual Property rights are not infringed upon when integrating MPS products into any application. MPS will not assume any legal responsibility for any said applications.

MPS Proprietary Information. Unauthorized Photocopy and Duplication Prohibited.
© 2013 MPS. All Rights Reserved.