PLC-RSC- 24UC/2X21/FG - Relay module

2910536

https://www.phoenixcontact.com/pc/products/2910536

Please be informed that the data shown in this PDF document is generated from our online catalog. Please find the complete data in the user documentation. Our general terms of use for downloads are valid.



PLC-INTERFACE, consisting of a relay base and plug-in safety relay with force-guided contacts in accordance with DIN EN 61810-3, Screw connection, 2 changeover contacts, forcibly actuated, Bridge rectifier, Input voltage: 24 V AC/DC

Product description

The force-guided coupling relay module is approved for industrial control equipment in accordance with UL 508 (cULus listed). The requirements for type A in accordance with DIN EN 61810-3 are satisfied if the circuit is designed as 1 N/O contact / 1 N/C contact.

Commercial data

Item number	2910536
Packing unit	10 pc
Minimum order quantity	1 pc
Note	Made to order (non-returnable)
Product key	DK623J
GTIN	4055626486871
Weight per piece (including packing)	82.8 g
Weight per piece (excluding packing)	82.8 g
Customs tariff number	85364190
Country of origin	DE

Technical data

Product properties

Product type	Relay Module
Product family	PLC-INTERFACE
Application	Forcibly guided contacts
Operating mode	100% operating factor
Mechanical service life	approx. 10^7 cycles
B_{10d}	600000 Cycles (AC1; 250 V / 6 A; 1 NO)
	900000 Cycles (AC1; 250 V / 3 A; 1 NO)
	1800000 Cycles (AC1; 250 V / 1,5 A; 1 NO)
	180000 Cycles (AC15; 250 V / 3 A; 1 NO)
	560000 Cycles (AC15; 250 V / 2 A; 1 NO)
	4600000 Cycles (AC15; 250 V / 0,75 A; 1 NO)
	360000 Cycles (DC13; 24 V / 3 A; 1 NO)
	740000 Cycles (DC13; 24 V / 1,5 A; 1 NO)
	4200000 Cycles (DC13; 24 V / 0,75 A; 1 NO)

Insulation characteristics: Standards/regulations

Insulation	Safe isolation, reinforced insulation
Overvoltage category	III
Pollution degree	2

Data management status

Date of last data management	20.03.2025

Electrical properties

Maximum power dissipation for nominal condition	0.72 W
Test voltage (Winding/contact)	4 kV_{rms} (50 Hz, 1 min., winding/contact)
Test voltage (Changeover contact/changeover contact)	2.5 kV_{rms} (50 Hz, 1 min., changeover contact/changeover contact)

Standards/regulations

Rated insulation voltage	250 V AC
Rated surge voltage	6 kV

Input data

Coil side

Nominal input voltage U_N	24 V AC/DC
Input voltage range	20.9 V AC/DC ... 32.4 V AC/DC (20 °C)
Input voltage range in reference to U_N	see diagram
Nominal voltage (plugged-in electromechanical relay)	24 V DC
Drive and function	monostable
Drive (polarity)	polarized
Typical input current at U_N	30 mA

Typical response time	3 ms ... 15 ms
Typical release time range	3 ms ... 15 ms
Protective circuit	Bridge rectifier
Operating voltage display	Yellow LED

Output data

Switching

Contact switching type	2 changeover contacts, forcibly actuated
Type of switch contact	Single contact
Contact material	AgNi
Maximum switching voltage	250 V AC/DC
Minimum switching voltage	5 V (10 mA)
Limiting continuous current	6 A
Maximum inrush current	6 A
Min. switching current	10 mA (5 V)
Interrupting rating (ohmic load) max.	144 W (24 V DC)
	288 W (48 V DC)
	88 W (110 V DC)
	110 W (220 V DC)
	1500 VA (250 V AC)
Switching capacity min.	150 mW
Switching capacity	3 A (24 V (DC13))
	3 A (230 V, AC15)
Force-guided contacts in accordance with EN 61810-3	Type B

Connection data

Connection method	Screw connection
Stripping length	8 mm
Screw thread	M3
Conductor cross-section rigid	0.14 mm² ... 2.5 mm²
Conductor cross-section flexible	0.14 mm² ... 2.5 mm²
	0.2 mm² ... 2.5 mm² (Single ferrule)
	2x 0.5 mm² ... 1.5 mm² (TWIN ferrule)
Conductor cross-section AWG	26 ... 14
Tightening torque	0.6 Nm ... 0.8 Nm

Dimensions

Width	14 mm
Height	80 mm
Depth	104 mm

Material specifications

Color	gray (RAL 7042)

Environmental and real-life conditions

Ambient conditions

Degree of protection (Relay)	RT II (Relay)
Degree of protection (Relay base)	IP20 (Relay base)
Degree of protection (Installation location)	≥ IP54 (Installation location)
Ambient temperature (operation)	-20 °C ... 60 °C
Ambient temperature (storage/transport)	-20 °C ... 85 °C
Altitude	≤ 2000 m

Approvals

CE

Certificate	CE-compliant

UKCA

Certificate	UKCA-compliant

UL, USA

Identification	UL 508
	UL 508 Recognized

UL, USA/Canada

Identification	UL 508
	UL 508 Recognized

Shipbuilding approval

Certificate	TAE0000196

Corrosive gas test

Identification	ISA-S71.04. G3 Harsh Group
	EN 60068-2-60

Shipbuilding data

Temperature	D
Humidity	A
Vibration	B/C
EMC	B
Enclosure	Required protection according to the Rules shall be provided upon installation on board

EMC data

Electromagnetic compatibility	Conformance with EMC directive
Low Voltage Directive	Conformance with Low Voltage Directive

Standards and regulations

Standards/regulations

Standards/regulations	IEC 60947-5-1
	DIN EN 61810-3

Mounting

Mounting type	DIN rail mounting
Assembly note	in rows with zero spacing
Mounting position	any

Drawings

Diagram

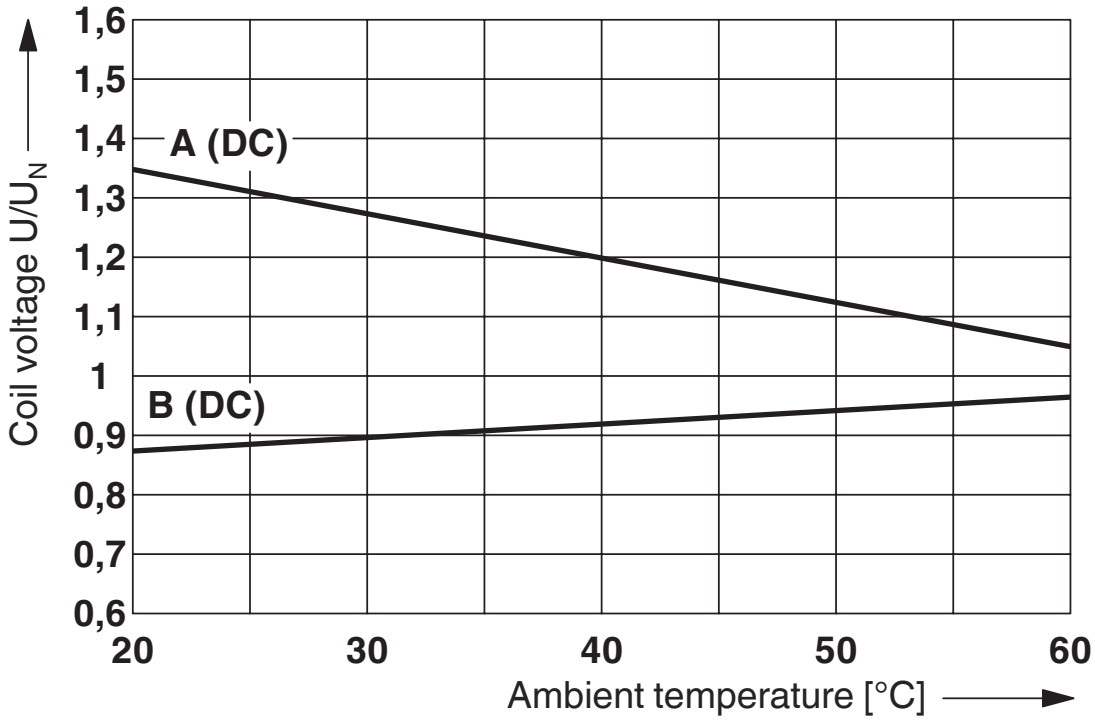

Curve A: maximum continuous voltage at limiting continuous current
Curve B: minimum pick-up voltage for pre-excitation with U_N and limiting continuous current

Diagram

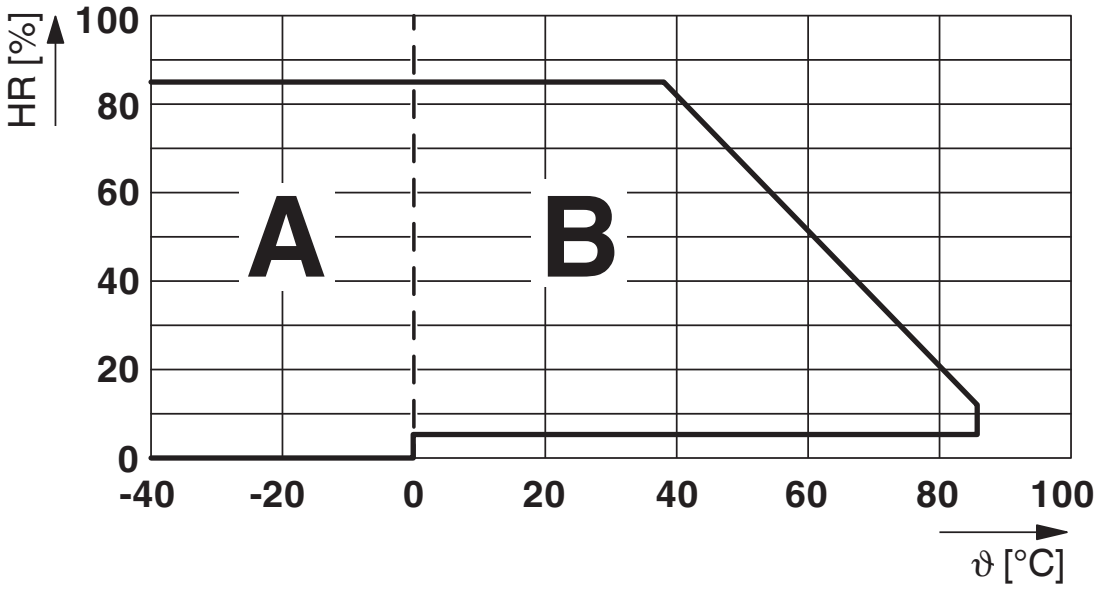

Permissible humidity for operation and storage.
The maximum permissible ambient temperature as specified in the data sheet must be observed.

Area A: Ice buildup at ambient temperatures ≤ 0°C must be prevented
Area B: Condensation at ambient temperatures > 0°C must be prevented

On 30 full days that are naturally distributed across an entire year, a humidity level of 95% is permissible at an ambient temperature ≤ 25°C.

Circuit diagram

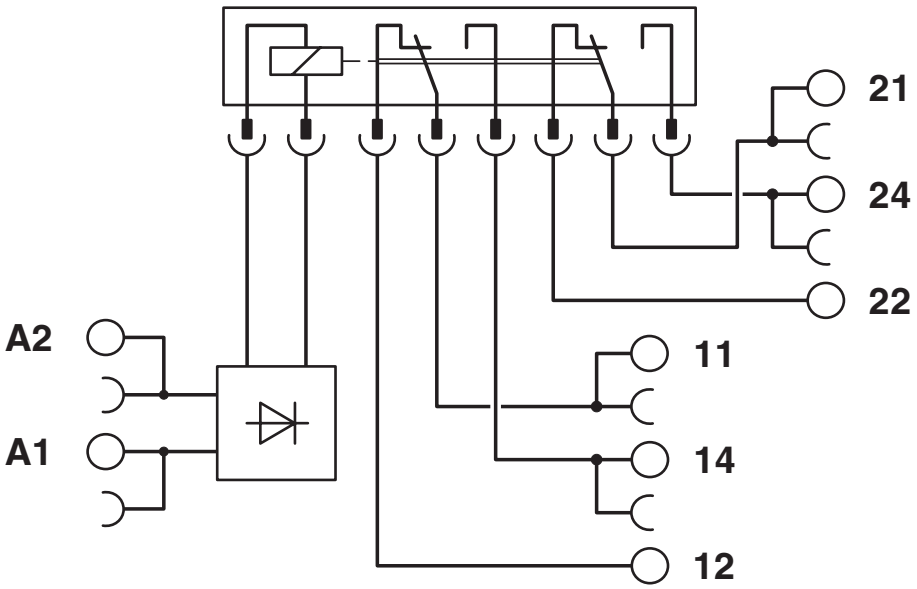

Approvals

To download certificates, visit the product detail page: https://www.phoenixcontact.com/pc/products/2910536

EAC
Approval ID: RU*C-DE.*08.B.00010

DNV GL
Approval ID: TAE0000196

cULus Listed
Approval ID: E140324

Classifications

ECLASS

ECLASS-13.0	27371601
ECLASS-15.0	27371601

ETIM

ETIM 9.0	EC001437

UNSPSC

UNSPSC 21.0	39122300

Environmental product compliance

EU RoHS

Fulfills EU RoHS substance requirements	Yes
Exemption	7(a), 7(c)-I

China RoHS

Environment friendly use period (EFUP)	EFUP-50
	An article-related China RoHS declaration table can be found in the download area for the respective article under "Manufacturer declaration". For all articles with EFUP-E, no China RoHS declaration table issued and required.

EU REACH SVHC

REACH candidate substance (CAS No.)	Hexahydromethylphthalic anhydride(CAS: n/a)
	Lead(CAS: 7439-92-1)
SCIP	d2be1930-d902-4072-8267-4e28d9e19a91

Phoenix Contact 2025 © - all rights reserved
https://www.phoenixcontact.com

PHOENIX CONTACT GmbH & Co. KG
Flachsmarktstraße 8
D-32825 Blomberg
+49 (0) 5235-3 00
info@phoenixcontact.com