Data sheet

MWS120-ZZN1NF00S01

MWS120

MEASURING WHEEL ENCODERS

SICK
Sensor Intelligence.

Illustration may differ

Ordering information

Type	part no.
MWS120-ZZN1NF00S01	1121018

Included in delivery: AFS60A-S4NB262144 (1), BEF-MR-010020 (1), BEF-MWS120-ARM (1)

Other models and accessories ➜ www.sick.com/MWS120

Detailed technical data

Features

Special device	✓
Specialty	Premounted 1059050 AFS60A-S4NB262144 absolute encoder and 5312988 BEF-MR-010020 measuring wheel
Standard reference device	MWS120-12N1NF12x00, 1112907

Safety-related parameters

$MTTF_D$ (mean time to dangerous failure)	80 years (EN ISO 13849-1) [1) 2)]

[1)] This product is a standard product and does not constitute a safety component as defined in the Machinery Directive. Calculation based on nominal load of components, average ambient temperature 40 °C, frequency of use 8760 h/a. All electronic failures are considered hazardous. For more information, see document no. 8015532.

[2)] Value refers to the mounted encoder.

Performance

Number of steps per revolution (max. resolution)	262,144 (18 bit)
Measuring increment (resolution in mm/pulse)	0.0008 [1)] [2)]

[1)] Calculation example: Circumference of wheel / pulses per revolution = 200 mm / 16384 pulses per revolution = 0,012mm/pulse.

[2)] Value based on measuring wheel circumference. The measuring wheel circumference depends on manufacturing tolerances, wear and tear, the selected spring tensioning force, and the behavior of the measurement wheel surface at different temperatures and on different measurement surfaces. To obtain the most accurate measurement results, we recommend performing a reference run for positioning tasks so that application-specific measuring wheel characteristics can be taken into account.

Interfaces

Communication interface	PROFINET
Programmable/configurable	✓

Electrical data

Connection type	Male connector, Female connector, 1x, 2x, M12, M12, 4-pin, 4-pin, axial, axial
Supply voltage	10 V DC ... 30 V DC
Reverse polarity protection	–

Mechanical data

Measuring wheel circumference	200 mm [1]
Measuring wheel surface	O-ring NBR70
Mounting	Measuring wheel mounted at the front
Spring arm mechanism material	
Spring element	Stainless steel
Measuring wheel, spring arm	Aluminum
Start up torque	0.5 Ncm
Operating torque	0.3 Ncm
Bearing lifetime	3.0 x 10^9 revolutions
Minimum spring tension force	4 N [2] [3]
Max. permissible working area for the spring (continuous operation)	± 10 mm
Service life of spring element	> 1.5 million cycles
Mounting position relative to the measuring object	Preferably from above, from below possible [4]
Mounted encoder	AFS60 PROFINET, AFS60A-S4NB262144, 1059050
Mounted mechanic	BEF-MWS120-ARM, 2118239
Attached measuring wheel	BEF-MR-010020, 5312988

[1] The surface of a measuring wheel is subject to wear. This depends on contact pressure, acceleration behavior in the application, traversing speed, measurement surface, mechanical alignment of the measuring wheel, temperature, and ambient conditions. We recommend you regularly check the condition of the measuring wheel and replace as required.
[2] The right spring tension force for the application shall keep the slippage at a minimum in the application working conditions and measuring surface, without damaging the measuring surface.
[3] The clamping force can be set in 6 fixed increments of 4 N. 4 N corresponds to one increment.
[4] When mounted from below, the encoder weight during spring pretensioning must be taken into account.

Ambient data

EMC	According to EN 61000-6-2 and EN 61000-6-3 [1]
Operating temperature range	–10 °C ... +70 °C [2]
Storage temperature range	–40 °C ... +100 °C [2]

[1] EMC according to the standards quoted is achieved if shielded cables are used.
[2] This value reflects the smallest temperature value of the installed products. For more information, please look at the individual data sheets.

Certificates

EU declaration of conformity	✓
UK declaration of conformity	✓
ACMA declaration of conformity	✓
Moroccan declaration of conformity	✓
China-RoHS	✓

Classifications

ECLASS 5.0	27270501
ECLASS 5.1.4	27270501
ECLASS 6.0	27270590
ECLASS 6.2	27270590

ECLASS 7.0	27270501
ECLASS 8.0	27270501
ECLASS 8.1	27270501
ECLASS 9.0	27270501
ECLASS 10.0	27270790
ECLASS 11.0	27270707
ECLASS 12.0	27270504
ETIM 5.0	EC001486
ETIM 6.0	EC001486
ETIM 7.0	EC001486
ETIM 8.0	EC001486
UNSPSC 16.0901	41112113

Dimensional drawing

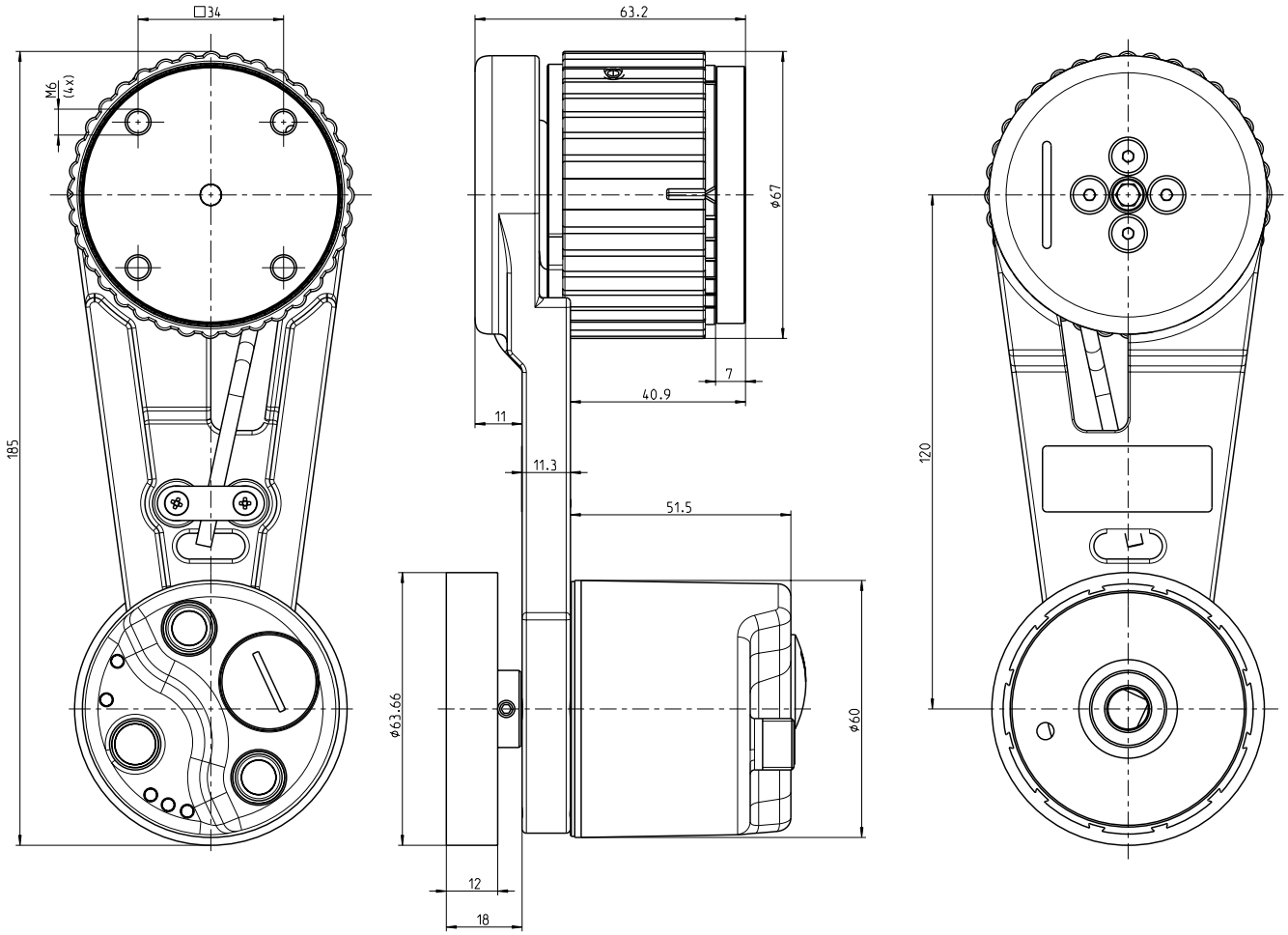

Dimensions in mm (inch)

Dimensional drawing

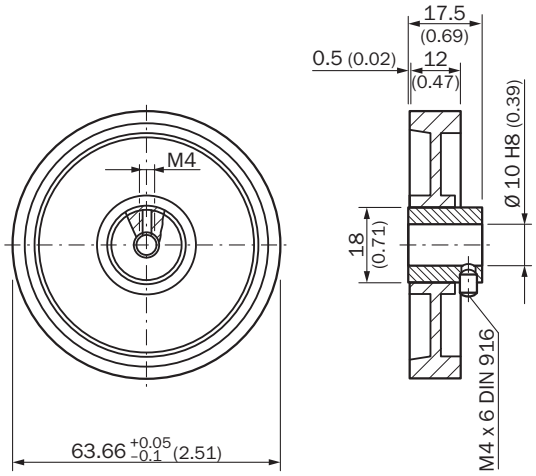

Dimensions in mm (inch)

PIN assignment Male connector

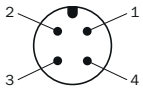

Supply voltage

PIN	Wire color	Signal
1	Brown	U_S 10 V ... 30 V
2	White	Not assigned
3	Blue	GND
4	Black	Not assigned

PIN assignment Female connector

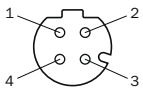

Port 1, Port 2

PIN	Wire color	Signal
1	Yellow	T x D+
2	White	R x D+
3	Orange	T x D-
4	Blue	R x D-

Connection diagram

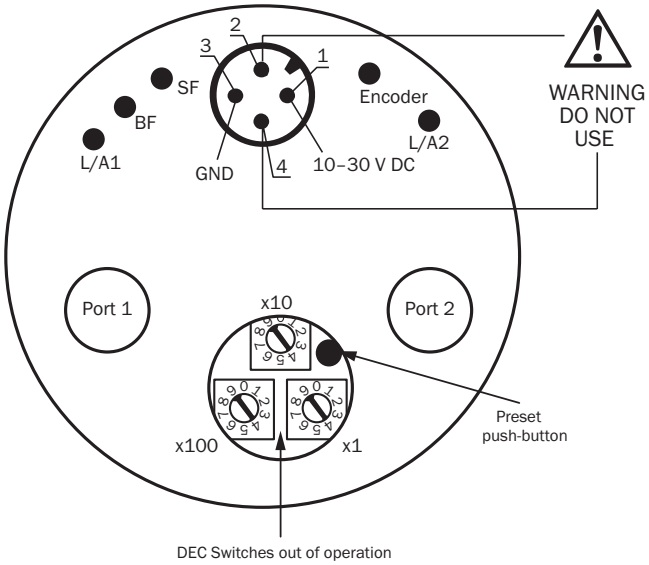

SICK AT A GLANCE

SICK is one of the leading manufacturers of intelligent sensors and sensor solutions for industrial applications. A unique range of products and services creates the perfect basis for controlling processes securely and efficiently, protecting individuals from accidents and preventing damage to the environment.

We have extensive experience in a wide range of industries and understand their processes and requirements. With intelligent sensors, we can deliver exactly what our customers need. In application centers in Europe, Asia and North America, system solutions are tested and optimized in accordance with customer specifications. All this makes us a reliable supplier and development partner.

Comprehensive services complete our offering: SICK LifeTime Services provide support throughout the machine life cycle and ensure safety and productivity.

For us, that is “Sensor Intelligence.”

WORLDWIDE PRESENCE:

Contacts and other locations –www.sick.com