Data sheet



OD2-P120W60U0

OD Value

DISPLACEMENT MEASUREMENT SENSORS

SICK
Sensor Intelligence.



Illustration may differ

Ordering information

Type	part no.
OD2-P120W60U0	6036630

Other models and accessories ➜ www.sick.com/OD_Value

Detailed technical data

Features

Measuring range	60 mm ... 180 mm [1]
Target	Natural objects
Repeatability	30 µm [2] [3] [4]
Linearity	± 120 µm [2] [3] [5]
Response time	≥ 1 ms
Output time	≥ 0.5 ms
Light source	Laser, redvisible red light
Type of light	Visible red light
Laser class	2 (IEC 60825-1:2014, EN 60825-1:2014) [6]
Typ. light spot size (distance)	1 mm x 1.5 mm (120 mm)
Additional function	Mean-value setting 1 ... 64x Automatic sensitivity adjustment Analog outputs can be taught in Invertable analog output Teach-in of digital output Invertable switching output Multifunctional input: laser-off / external teach-in / trigger Switching mode: distance to object (Dt0) Switching mode: window (Wnd)
Safety-related parameters	
$MTTF_D$	101 years

[1] 6% ... 90% remission factor.
[2] Measurement on 90 % remission (ceramic, white).
[3] At averaging function medium.
[4] Constant ambient conditions.
[5] When calibrated in the application regularly.
[6] Wavelength: 655 nm, max. output: 1 mW.

DC_{avg}	0%

[1] 6% ... 90% remission factor.
[2] Measurement on 90 % remission (ceramic, white).
[3] At averaging function medium.
[4] Constant ambient conditions.
[5] When calibrated in the application regularly.
[6] Wavelength: 655 nm, max. output: 1 mW.

Interfaces

Digital output	
Number	2 [1]
Type	PNP
Maximum output current I_A	≤ 100 mA
Analog output	
Number	1
Type	Voltage output
Voltage	0 V ... 10 V, > 10,000 Ω
Resolution	16 bit
Multifunctional input (MF)	1 x MF [2]

[1] PNP: HIGH = V_S - (< 2 V) / LOW = < 2 V; NPN: HIGH = < 2 V / LOW = V_S.
[2] MF can be used as laser-off, trigger, external teach-in, or deactivated; response time ≤ 3 ms.

Electronics

Supply voltage U_B	DC 18 V ... 24 V
Power consumption	≤ 2.88 W [1]
Warm-up time	≤ 30 min
Indication	Distance bar graph, up to 8 status LEDs
Enclosure rating	IP67
Protection class	III

[1] Without load, with current output.

Mechanics

Dimensions (W x H x D)	20.4 mm x 60 mm x 50 mm
Housing material	Plastic (PBT)
Window material	Plastic (PMMA)
Weight	70 g
Connection type	Male connector, M12, 8-pin, swivel connector unit

Ambient data

Ambient temperature, operation	–10 °C ... +40 °C
Ambient temperature, storage	–20 °C ... +60 °C
Relative air humidity (non-condensing)	35 % ... 95 %
Temperature drift	± 0.08 % FS/K (FS = Full Scale = Measuring range of sensor)
Typ. Ambient light immunity	Artificial light: ≤ 3,000 lx Sunlight: ≤ 10,000 lx

Vibration resistance	10 Hz ... 55 Hz (amplitude 1.5 mm, x-, y-, z-axis 2 hours each)
Shock resistance	50 G (x, y, z axis 3 times each)

Certificates

EU declaration of conformity	✓
UK declaration of conformity	✓
ACMA declaration of conformity	✓
Moroccan declaration of conformity	✓
China-RoHS	✓

Classifications

ECLASS 5.0	27270801
ECLASS 5.1.4	27270801
ECLASS 6.0	27270801
ECLASS 6.2	27270801
ECLASS 7.0	27270801
ECLASS 8.0	27270801
ECLASS 8.1	27270801
ECLASS 9.0	27270801
ECLASS 10.0	27270801
ECLASS 11.0	27270801
ECLASS 12.0	27270916
ETIM 5.0	EC001825
ETIM 6.0	EC001825
ETIM 7.0	EC001825
ETIM 8.0	EC001825
UNSPSC 16.0901	41111613

Dimensional drawing OD2-x120W60xx

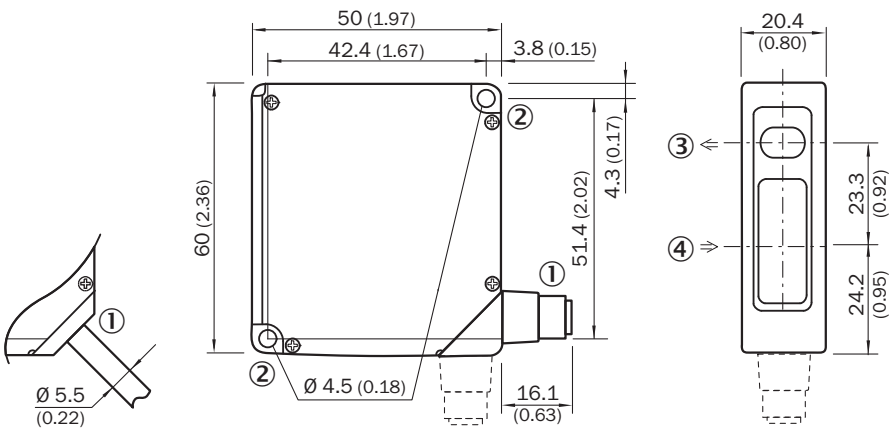

Dimensions in mm (inch)
① 2 m cable or M12 connector; 90° rotatable

② Mounting hole, Ø 4.5 mm
③ optical axis, sender
④ optical axis, receiver

Connection type OD2-xxxxxxA0 OD2-xxxxxxC0 OD2-xxxxxxI0 OD2-xxxxxxU0 connector M12, 8-pin

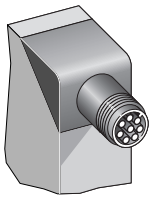

Connection diagram

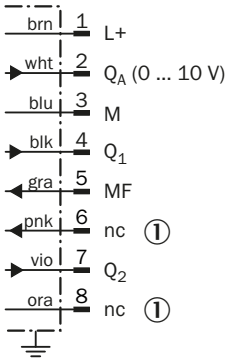

① Not assigned

Adjustment possible OD2-xxxxxxUx

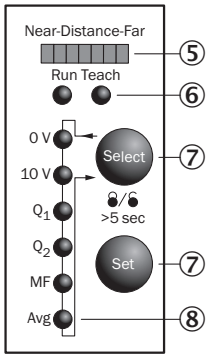

⑤ Distance indicator
⑥ mode indicator (Run/Teach)
⑦ Control elements
⑧ status indicator in- and outputs (Run-mode)/menu indicator (Teach-mode)

Light spot size OD2-x120W60xx

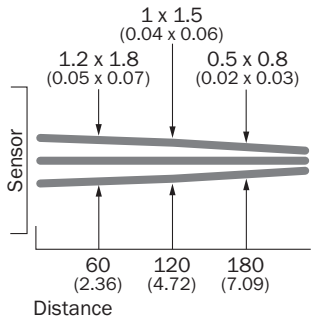

All dimensions in mm (inch)

Linearity OD2-x120xxxxx

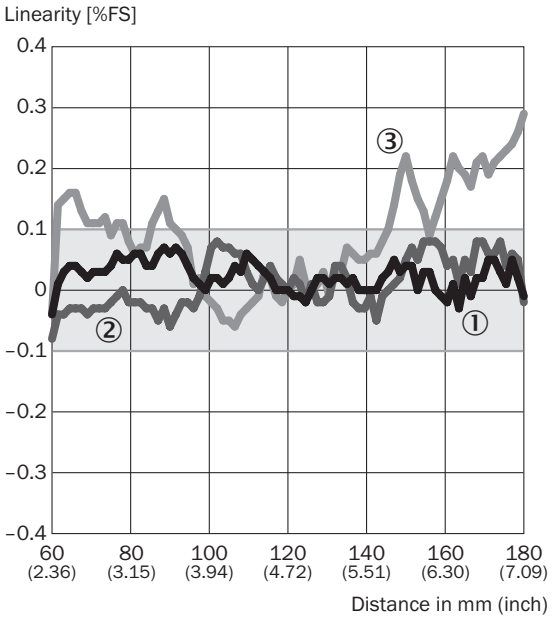

① White ceramic
② Black paper
③ stainless steel

Recommended accessories

Other models and accessories ➜ www.sick.com/OD_Value

	Brief description	Type	part no.
connectors and cables			
	• **Connection type head A:** Female connector, M12, 8-pin, straight • **Connection type head B:** Flying leads • **Signal type:** Sensor/actuator cable • **Cable:** 2 m, 8-wire, PVC • **Description:** Sensor/actuator cable, special color code, shielded • **Connection systems:** Flying leads	DOL-1208-G02MF	6020663
Mounting systems			
	• **Description:** Stainless-steel mounting bracket • **Material:** Stainless steel • **Details:** Stainless steel	BEF-WN-OD1000	4089813

SICK AT A GLANCE

SICK is one of the leading manufacturers of intelligent sensors and sensor solutions for industrial applications. A unique range of products and services creates the perfect basis for controlling processes securely and efficiently, protecting individuals from accidents and preventing damage to the environment.

We have extensive experience in a wide range of industries and understand their processes and requirements. With intelligent sensors, we can deliver exactly what our customers need. In application centers in Europe, Asia and North America, system solutions are tested and optimized in accordance with customer specifications. All this makes us a reliable supplier and development partner.

Comprehensive services complete our offering: SICK LifeTime Services provide support throughout the machine life cycle and ensure safety and productivity.

For us, that is “Sensor Intelligence.”

WORLDWIDE PRESENCE:

Contacts and other locations –www.sick.com