Data sheet



OD1-B015C05A14

OD Mini

DISPLACEMENT MEASUREMENT SENSORS

SICK
Sensor Intelligence.



Illustration may differ

Ordering information

Type	part no.
OD1-B015C05A14	6050521

Other models and accessories ➜ www.sick.com/OD_Mini

Detailed technical data

Features

Measuring range	10 mm ... 20 mm
Target	Natural objects
Repeatability	1 µm [1) 2)]
Linearity	± 10 µm [3)]
Response time	≥ 2 ms [4)]
Output time	≥ 0.5 ms
Light source	Laser, redvisible red light
Type of light	Visible red light
Laser class	1 (IEC 60825-1:2014, EN 60825-1:2014) [5)]
Typ. light spot size (distance)	700 µm x 500 µm (15 mm)
Additional function	Averaging 1 ... 512x Automatic or manual sensitivity adjustment Switching mode: window (Wnd) Switching mode: distance to object (Dt0) Switiching mode: object between sensor and background (ObSB) Multifunctional input: laser-off / external teach-in / trigger
General notes	
Note on use	The sensor head can be used with evaluation unit AOD1 or stand-alone via RS-485
Note	Not free of paint wetting impairment substances.
Safety-related parameters	

1) Averaging function set to: 512.
2) Constant ambient conditions.
3) Measurement on 90 % remission (ceramic, white).
4) With fixed sensitivity adjustment and averaging setting = 1. With automatic sensitivity and measuring rate 500 µs: 2 ... 7.5 ms response time/measuring rate 1,000 µs: 4 ... 15 ms response time.
5) Wavelength: 655 nm, max. output: 390 µW (laser class 1) / < 1 mW (laser class 2).

$MTTF_D$	101 years
DC_{avg}	0%

[1] Averaging function set to: 512.
[2] Constant ambient conditions.
[3] Measurement on 90 % remission (ceramic, white).
[4] With fixed sensitivity adjustment and averaging setting = 1. With automatic sensitivity and measuring rate 500 µs: 2 ... 7.5 ms response time/measuring rate 1,000 µs: 4 ... 15 ms response time.
[5] Wavelength: 655 nm, max. output: 390 µW (laser class 1) / < 1 mW (laser class 2).

Interfaces

Serial	✓ , RS-485
PROFIBUS DP	✓
Type of fieldbus integration	Optional, over external evaluation unit AOD1 and Gateway WI180C-PB
Digital output	
Number	1 ... 3 [1]
Type	PNP/NPN, selectable
Analog output	
Number	1 [1]
Type	Current output
Current	4 mA ... 20 mA, ≤ 300 Ω

[1] Optional over evaluation unit AOD1.

Electronics

Supply voltage U_B	DC 12 V (–5 %) ... DC 24 V (+10 %)
Power consumption	≤ 1.92 W [1]
Warm-up time	≤ 5 min
Indication	4-digit 7-segment display (plus 4 LEDs for status display)
Enclosure rating	IP67
Protection class	III

[1] Without load, with current output.

Mechanics

Dimensions (W x H x D)	17.8 mm x 44.4 mm x 31 mm
Control elements	4 buttons
Housing material	Metal (Aluminum)
Window material	Plastic (PPSU)
Weight	40 g
Connection type	Male connector, M8, 4-pin

Ambient data

Ambient temperature, operation	–10 °C ... +50 °C
Ambient temperature, storage	–20 °C ... +60 °C
Min. rel. humidity (not condensing)	35 %
Max. rel. humidity (not condensing)	95 %
Temperature drift	± 0.08 % FS/K (FS = Full Scale = Measuring range of sensor)

Typ. Ambient light immunity	Artificial light: ≤ 3,000 lx Sunlight: ≤ 10,000 lx
Vibration resistance	10 Hz ... 55 Hz (amplitude 1.5 mm, x-, y-, z-axis 2 hours each)
Shock resistance	50 G (x, y, z axis 3 times each)

Certificates

EU declaration of conformity	✓
UK declaration of conformity	✓
ACMA declaration of conformity	✓
Moroccan declaration of conformity	✓
China-RoHS	✓

Classifications

ECLASS 5.0	27270801
ECLASS 5.1.4	27270801
ECLASS 6.0	27270801
ECLASS 6.2	27270801
ECLASS 7.0	27270801
ECLASS 8.0	27270801
ECLASS 8.1	27270801
ECLASS 9.0	27270801
ECLASS 10.0	27270801
ECLASS 11.0	27270801
ECLASS 12.0	27270916
ETIM 5.0	EC001825
ETIM 6.0	EC001825
ETIM 7.0	EC001825
ETIM 8.0	EC001825
UNSPSC 16.0901	41111613

Dimensional drawing Aluminum housing

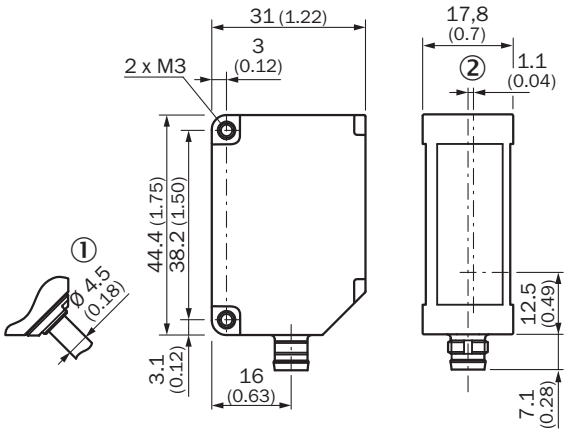

Dimensions in mm (inch)
① variant with 30 cm cable with M12, 5-pin connector
② Optical axis

Connection type

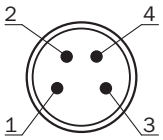

Connection diagram

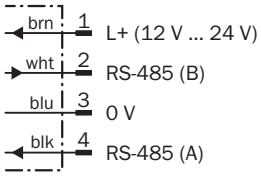

Adjustments

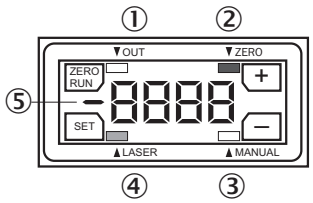

① digital output status indicator
② Zero offset status indicator
③ Teach mode status indicator
④ Laser status indicator
⑤ Minus sign for measured value indicator

Linearity

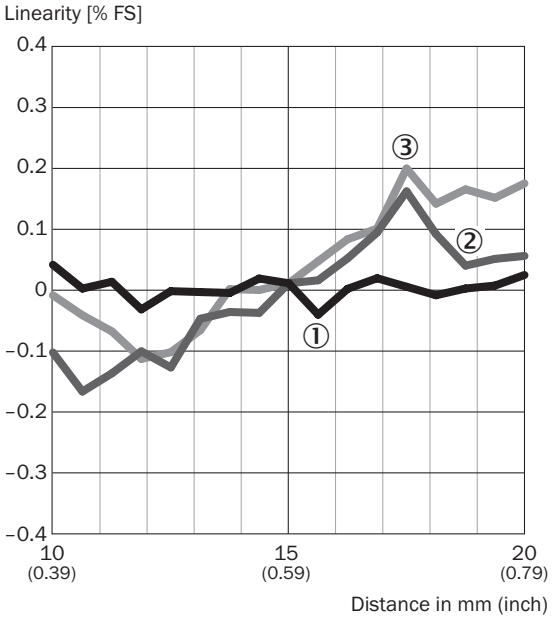

① White ceramic
② stainless steel
③ black rubber

Recommended accessories

Other models and accessories ➜ www.sick.com/OD_Mini

	Brief description	Type	part no.
connectors and cables			
	• **Connection type head A:** Female connector, M8, 4-pin, straight • **Connection type head B:** Male connector, M8, 4-pin, straight • **Cable:** 2 m, PUR	DSL-0804-G02MB	6059742
	• **Connection type head A:** Female connector, M8, 4-pin, straight, A-coded • **Connection type head B:** Male connector, M8, 4-pin, straight, A-coded • **Signal type:** Sensor/actuator cable • **Cable:** 2 m, 4-wire, PUR, halogen-free • **Description:** Sensor/actuator cable, unshielded • **Application:** Uncontaminated zones, Zones with oils and lubricants, Robot, Drag chain operation	YF8U14-020UA3M8U14	2096347
	• **Connection type head A:** Female connector, M8, 4-pin, straight, A-coded • **Connection type head B:** Flying leads • **Signal type:** Sensor/actuator cable • **Cable:** 2 m, 4-wire, PUR, halogen-free • **Description:** Sensor/actuator cable, unshielded • **Application:** Uncontaminated zones, Zones with oils and lubricants, Robot, Drag chain operation	YF8U14-020UA3XLEAX	2094791
	• **Connection type head A:** Female connector, M8, 4-pin, angled, A-coded • **Connection type head B:** Flying leads • **Signal type:** Sensor/actuator cable • **Cable:** 2 m, 4-wire, PUR, halogen-free • **Description:** Sensor/actuator cable, unshielded • **Application:** Uncontaminated zones, Zones with oils and lubricants, Robot, Drag chain operation	YG8U14-020UA3XLEAX	2095589
	• **Connection type head A:** Female connector, M8, 4-pin, straight, A-coded • **Connection type head B:** Flying leads • **Signal type:** Sensor/actuator cable • **Cable:** 0.6 m, 4-wire, PUR, halogen-free • **Description:** Sensor/actuator cable, unshielded • **Application:** Uncontaminated zones, Zones with oils and lubricants, Robot, Drag chain operation	YF8U14-C60UA3XLEAX	2145825
	• **Connection type head A:** Female connector, M8, 4-pin, straight, A-coded • **Connection type head B:** Flying leads • **Signal type:** Sensor/actuator cable • **Cable:** 1 m, 4-wire, PUR, halogen-free • **Description:** Sensor/actuator cable, unshielded • **Application:** Uncontaminated zones, Zones with oils and lubricants, Robot, Drag chain operation	YF8U14-010UA3XLEAX	2145826
Mounting systems			
	• **Description:** Mounting bracket, no alignment bracket • **Material:** Stainless steel • **Details:** Stainless steel	BEF-OD1-B	5328344
	• **Description:** Mounting bracket, for wall installation, no alignment bracket • **Material:** Stainless steel • **Details:** Stainless steel	BEF-OD1-A	5328343

	Brief description	Type	part no.
integration modules and adapters			
	• **Description:** OD Mini evaluation unit, master, 1 x Q, M8 male connector, 4-pin	AOD1-MR24Q1	6054270
	• **Description:** OD Mini evaluation unit, slave, 1 x Q, M8 male connector, 4-pin	AOD1-SR24Q1	6054271
	• **Description:** OD Mini evaluation unit, master, 2 x Q, M12 male connector, 5-pin	AOD1-MR25Q2	6054272
	• **Description:** OD Mini evaluation unit, slave, 2 x Q, M12 male connector, 5-pin	AOD1-SR25Q2	6054273
	• **Description:** OD Mini evaluation unit, OD5000 and OL1, master, 3 x Q, 1 x analog, open end cable, 2 m	AOD1-MR27C4	6058195
	• **Description:** OD Mini evaluation unit, OD5000 and OL1, slave, 3 x Q, 1 x analog, open end cable, 2 m	AOD1-SR27C4	6058196

SICK AT A GLANCE

SICK is one of the leading manufacturers of intelligent sensors and sensor solutions for industrial applications. A unique range of products and services creates the perfect basis for controlling processes securely and efficiently, protecting individuals from accidents and preventing damage to the environment.

We have extensive experience in a wide range of industries and understand their processes and requirements. With intelligent sensors, we can deliver exactly what our customers need. In application centers in Europe, Asia and North America, system solutions are tested and optimized in accordance with customer specifications. All this makes us a reliable supplier and development partner.

Comprehensive services complete our offering: SICK LifeTime Services provide support throughout the machine life cycle and ensure safety and productivity.

For us, that is “Sensor Intelligence.”

WORLDWIDE PRESENCE:

Contacts and other locations –www.sick.com