BMZ Pin Size 8 D38999 Contact for RG179 Cable



PEMACTRF8P08

Configuration

- Push-on BMZ Pin Connector
- 75 Ohms
- Connector Interface Types: D38999 Series I, D38999 Series III, D38999 Series IV, RG179 cable, M17/174-00001 cable
- Contact Size: 8

Features

- Fits any MIL-DTL-38999 size 8 insert
- Superior high frequency performance
- Blindmate connections
- Made from high quality materials giving a robust mechanical design
- Solderless inner connection to reduce assembly cost

Applications

- Civilian and Military Aerospace
- High Reliability Installations
- Harsh Environments

Description

The PEMACTRF8P08 from Pasternack is a D38999 size 8 pin contact that is designed for RG179 cable. This RF coaxial contact has a crimp/non-solder contact attachment method and is built to offer superior performance in demanding applications that require high-frequency data transmission. The BMZ coax contact comes with an impedance of 75 Ohms and a maximum VSWR of 1.5.

Our RF contact has a maximum frequency of 3 GHz. This BMZ RF contact is made up of stainless steel material with passivated plating. The PEMACTRF8P08 coax contact has a PTFE dielectric type and a dielectric withstanding voltage of 1000 Vrms. Our BMZ pin contact has a maximum insertion loss of 0.207 dB.

Pasternack's RF contact has an inner conductor material constructed of beryllium copper and an outer conductor material of stainless steel. These RF coax contacts are specifically engineered to minimize signal loss and crosstalk, providing excellent impedance matching and reducing VSWR. Our BMZ pin contact can operate at temperatures ranging from -65 to 125 degrees C.

PEMACTRF8P08 RF contact is part of more than one million RF, microwave, and millimeter wave parts in stock at Pasternack. This PEMACTRF8P08 coax contact is ready to buy and can be shipped worldwide the same business day as ordered from our warehouse in the United States. Pasternack maintains BMZ pin RF contacts in various sizes and configurations, which allows them to be customized to meet the specific requirements of different applications. For further information on similar products, our expert technical support and trained sales team can get you the ideal RF contact as per your requirements.

Electrical Specifications

Description	Minimum	Typical	Maximum	Units
Frequency Range	DC		3	GHz
VSWR			1.5:1	
Insertion Loss			0.207	
Operating Voltage (AC)			500	Vrms
Dielectric Withstanding Voltage (AC)			1,000	Vrms
Insulation Resistance	5,000			MOhms

© 2025 Infinite Electronics, Inc. Pasternack is a registered trademark of Infinite Electronics, Inc.
+1 (866) 558-2786 | sales@pasternack.com | pasternack.com

BMZ Pin Size 8 D38999 Contact for RG179 Cable



PEMACTRF8P08

Electrical Specifications

Description	Minimum	Typical	Maximum	Units
Impedance		75		Ohms

Installation

Description	Specification
Outer Contact Crimp Tool	Parallel Action Crimp Tool
Outer Contact Positioner	.213 Hex Die
Insertion Tool	No tool required
Extraction Tool	M81969/14-06

Mechanical Specifications

Insertion Force	0.13lbs [58.97g]
Extraction Force	0.75lbs [340.19g]
Mating Cycles	500 Cycles
Size	
Length	0.987 in [25.07 mm]
Width	0.315 in [8 mm]
Height	0.315 in [8 mm]
Weight	0.01 lbs [4.54 g]

Material Specifications

Description	Material	Plating
Contact	Beryllium Copper	Gold
Insulation	PTFE	
Outer Conductor	Stainless Steel	Passivated
Body	Stainless Steel	Passivated

Environmental Specifications

Temperature	
Operating Range	-65 to +125 deg C
Shock	MIL-STD-202, Method 213, Condition I
Vibration	MIL-STD-202, Method 204, Condition D
Salt Spray	MIL-STD-202, Method 101, Test Condition B

Compliance Certifications (see product page for current document)

Plotted and Other Data

Notes:

© 2025 Infinite Electronics, Inc. Pasternack is a registered trademark of Infinite Electronics, Inc.

BMZ Pin Size 8 D38999 Contact for RG179 Cable



PEMACTRF8P08

BMZ Pin Size 8 D38999 Contact for RG179 Cable from Pasternack Enterprises has same day shipment for domestic and International orders. Our RF, microwave and millimeter wave products maintain a 99.4% availability and are part of the broadest selection in the industry.

Click the following link (or enter part number in "SEARCH" on website) to obtain additional part information including price, inventory and certifications: BMZ Pin Size 8 D38999 Contact for RG179 Cable PEMACTRF8P08

URL: https://www.pasternack.com/bmz-pin-size-8-d38999-contact-for-RG179-cable-pemactrf8p08-p.aspx

The information contained within this document is accurate to the best of our knowledge and representative of the part described herein. It may be necessary to make modifications to the part and/or the documentation of the part in order to impliment improvements. Pasternack Enterprises reserves the right to make such changes as required. Unless otherwise stated, all specifications are nominal. Pasternack Enterprises does not make any representation or warranty regarding the suitability of the part described herein for any particular purpose, and Pasternack Enterprises does not assume liability arising out of the use of any part or document.

© 2025 Infinite Electronics, Inc. Pasternack is a registered trademark of Infinite Electronics, Inc.

PEMACTRF8P08 CAD Drawing

BMZ Pin Size 8 D38999 Contact for RG179 Cable

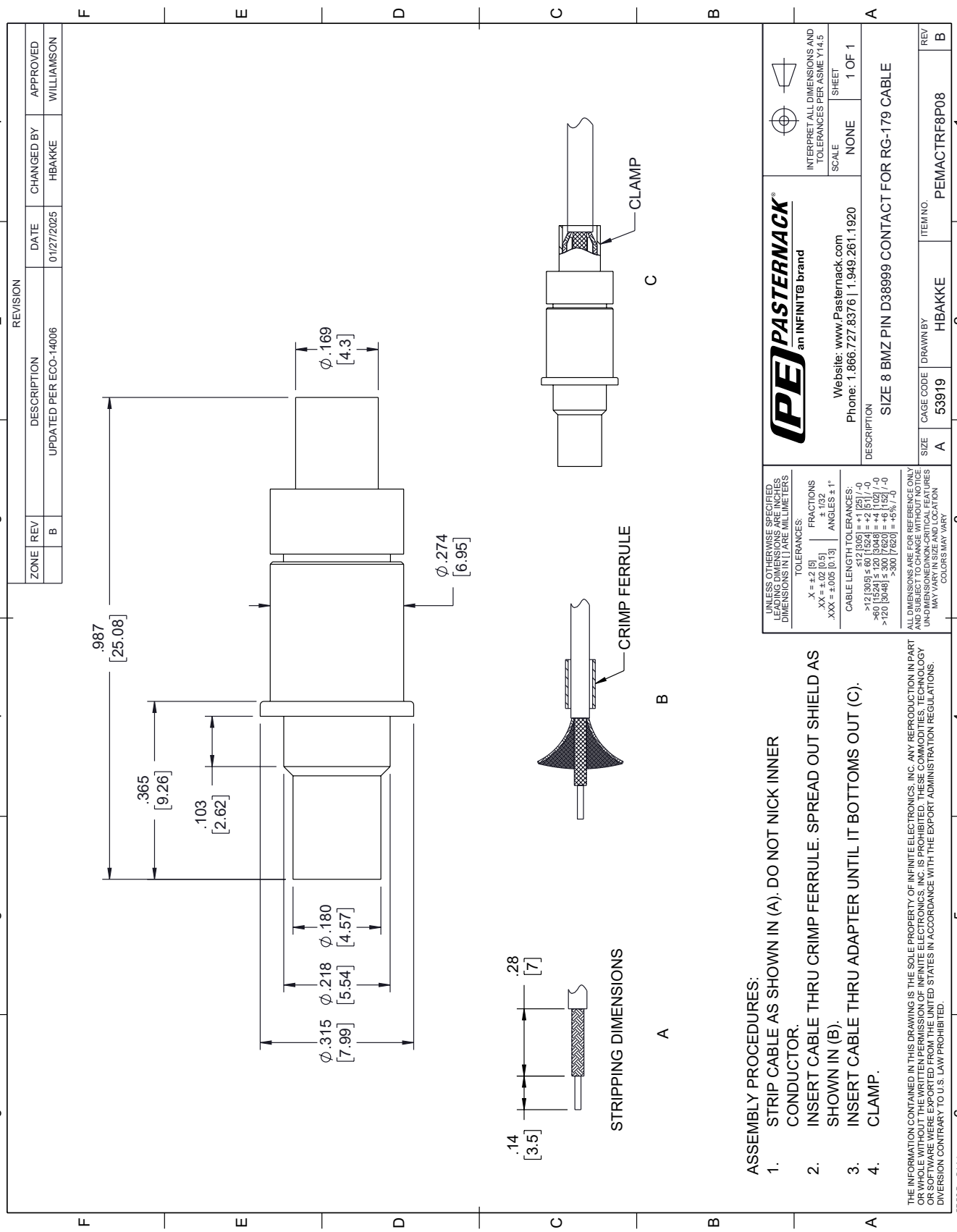

© 2025 Infinite Electronics, Inc. Pasternack is a registered trademark of Infinite Electronics, Inc.