EVQ6610-S-00A

55V, 3A Half-Bridge Power Driver Evaluation Board, AEC-Q100 Qualified

DESCRIPTION

The EVQ6610-S-00A is an evaluation board for the MPQ6610GS, a half-bridge power driver.

The EVQ6610-S-00A operates from a supply voltage of up to 55V, and can deliver load currents up to 3A. The input control signals for the MPQ6610 are either generated on the board, or from an external controller through the board's connector (P1).

The MPQ6610GS is available in an SOIC-8 package.

ELECTRICAL SPECIFICATIONS

Parameter	Symbol	Value	Units
Input voltage	V_{IN}	4 to 55	V
Maximum output current	I_{OUT-L}	3	A

FEATURES

- Wide 4V to 55V Input Voltage Range
- Up to 3A Output Current
- Internal Current Sense
- 2.5V, 3.3V, and 5V Compatible Logic Supply
- Over-Current Protection (OCP), Over-Voltage Protection (OVP), Over-Temperature Protection (OTP)
- Fault Indication Output
- Available in an SOIC-8 Package
- AEC-Q100 Qualified

APPLICATIONS

- Solenoid Drivers
- Brushed DC Motors
- Relay Drivers

All MPS parts are lead-free, halogen-free, and adhere to the RoHS directive. For MPS green status, please visit the MPS website under Quality Assurance. "MPS", the MPS logo, and "Simple, Easy Solutions" are trademarks of Monolithic Power Systems, Inc. or its subsidiaries.

EVQ6610-S-00A EVALUATION BOARD

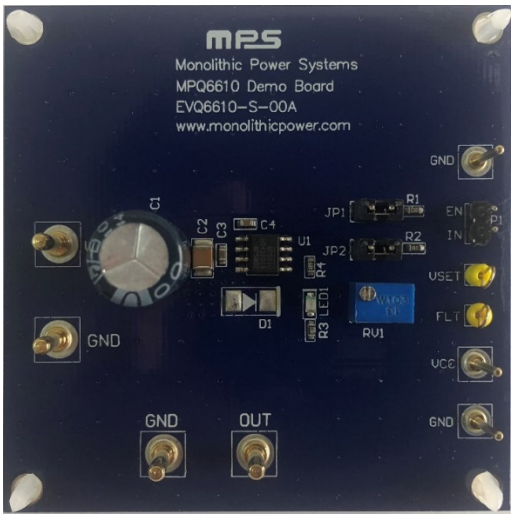

LxW (6.35cmx6.35cm)

Board Number	MPS IC Number
EVQ6610-S-00A	MPQ6610GS

MPS Proprietary Information. Patent Protected. Unauthorized Photocopy and Duplication Prohibited.
© 2021 MPS. All Rights Reserved.

QUICK START GUIDE

1. Attach the input voltage (4V ≤ V_{IN} ≤ 55V) to the VIN connector, and attach the input ground to the GND connector.
2. Attach the VCC voltage (2.5V, 3.3V, or 5V) to the VCC connector, and attach the input ground to the GND connector.
3. Input control signals can be generated on the board through the placement of short jumpers (JP1 and JP2), or by an external controller connected through the P1 connector. If using an external controller, remove the short jumpers (JP1 and JP2). Table 1 shows the input logic truth table.

Table 1: Input Logic Truth Table

EN	IN	OUT
0	0	Z
0	1	Z
1	0	L
1	1	H

4. The output current limit threshold is reached when the ISET pin reaches 1.5V. The ISET pin voltage scaling is set by the trimming potentiometer (RV1). For example, with a 10kΩ resistor connected from ISET to ground, the ISET pin voltage is 1V for every 1A of output current. This means that when the current reaches 1.5A, the ISET pin voltage reaches 1.5V, and a current trip occurs.

MPS Proprietary Information. Patent Protected. Unauthorized Photocopy and Duplication Prohibited.
© 2021 MPS. All Rights Reserved.

EVALUATION BOARD SCHEMATIC

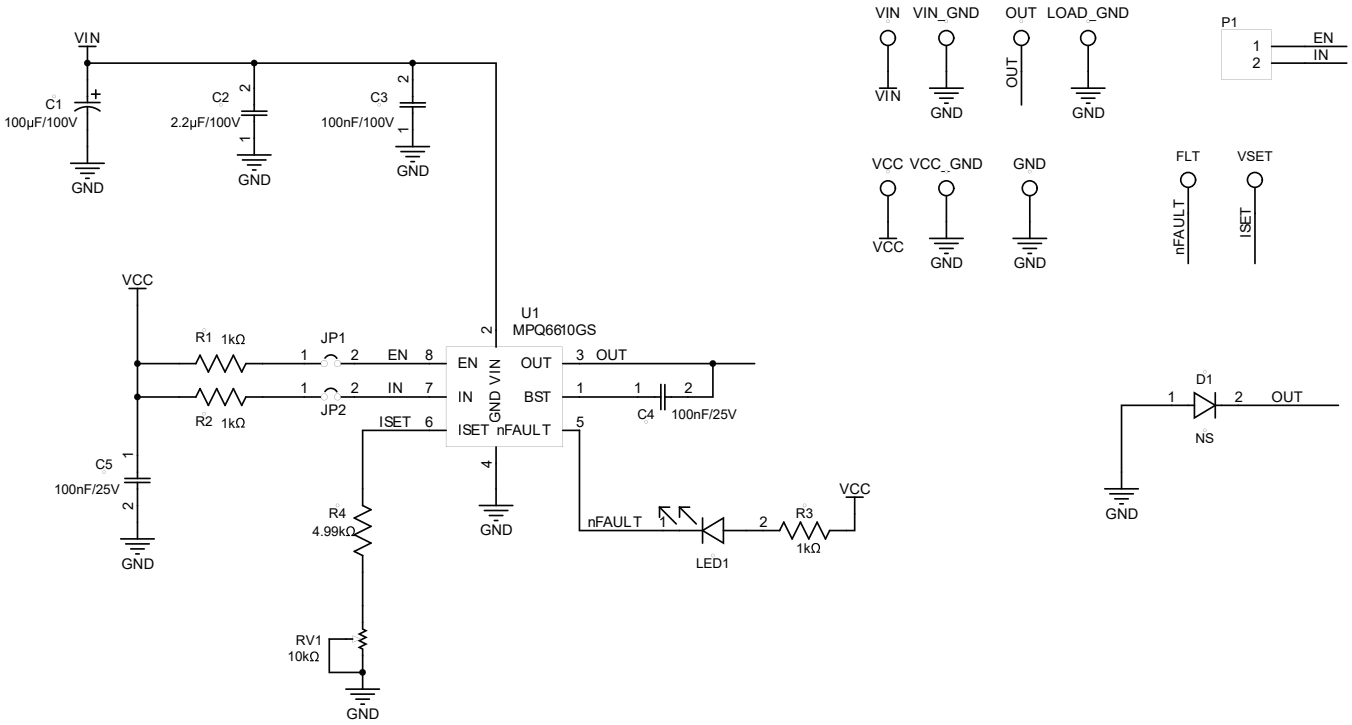

Figure 1: Evaluation Board Schematic

MPS Proprietary Information. Patent Protected. Unauthorized Photocopy and Duplication Prohibited.
© 2021 MPS. All Rights Reserved.

EVQ6610-S-00A BILL OF MATERIALS

Qty	Ref	Value	Description	Package	Manufacturer	Manufacturer P/N
1	C1	100μF	100V electrolytic capacitor	DIP	Jianghai	CD263-100V100
1	C2	2.2μF	100V ceramic capacitor, X7R	1210	Murata	GRM32ER72A225KA35L
1	C3	100nF	100V ceramic capacitor, X7R	0603	Murata	GRM188R72A104KA35D
2	C4, C5	100nF	25V ceramic capacitor, X7R	0603	Murata	GRM188R71E104KA01D
3	R1, R2, R3	1kΩ	Film resistor, 1%	0603	Yageo	RC0603FR-071KL
1	R4	4.99kΩ	Film resistor, 1%	0603	Yageo	RC0603FR-074K99L
1	RV1	10kΩ	Square trimming potentiometer	DIP	Bourns	3266W-1-103F
1	LED1	Red	LED	0805	Baihong	BL-HUE35A-AV-TRB
1	D1	NS				
3	JP1, JP2, P1	2 bits/ 2.54mm	Connector	DIP	Any	
2	JP1, JP2	2.54mm	Short jumper	DIP	Any	
2	FLT, VSET	Yellow	Test point	DIP	Any	
4	VIN, VIN_GND, OUT, LOAD_GND	Φ = 2mm	Connector, 2mm needle	DIP	Any	
3	VCC, VCC_GND, GND	Φ = 1mm	Connector, 1mm needle	DIP	Any	
1	U1	55V, 3A	Half-bridge power driver	SOIC-8	MPS	MPQ6610GS

MPS Proprietary Information. Patent Protected. Unauthorized Photocopy and Duplication Prohibited.
© 2021 MPS. All Rights Reserved.

PCB LAYOUT

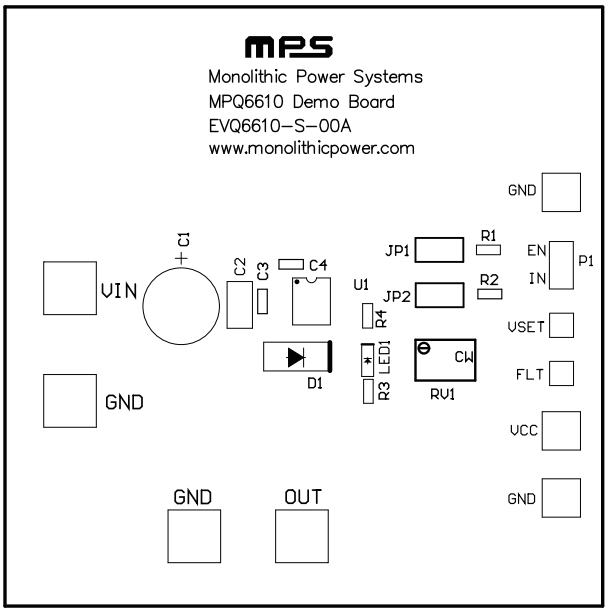

Figure 2: Top Silk Layer

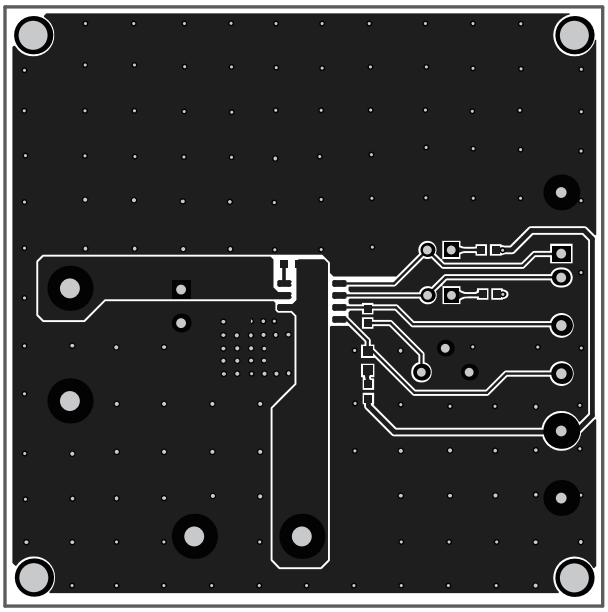

Figure 3: Top Layer

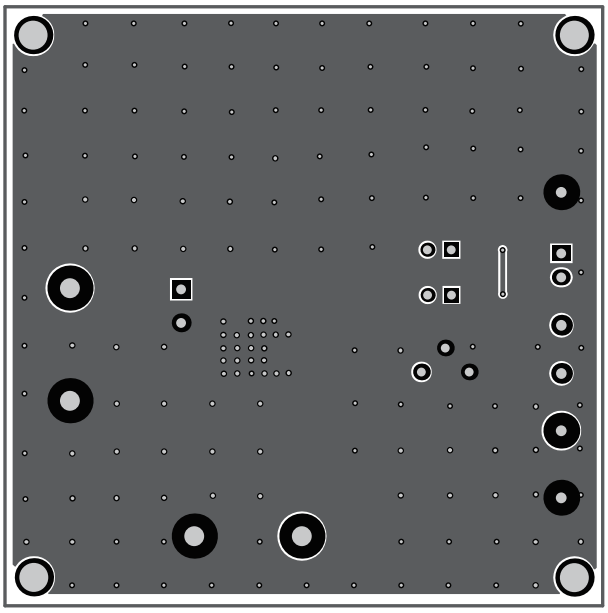

Figure 4: Bottom Layer

MPS Proprietary Information. Patent Protected. Unauthorized Photocopy and Duplication Prohibited.
© 2021 MPS. All Rights Reserved.

REVISION HISTORY

Revision #	Revision Date	Description	Pages Updated
1.0	3/19/2021	Initial Release	-

Notice: The information in this document is subject to change without notice. Please contact MPS for current specifications. Users should warrant and guarantee that third-party Intellectual Property rights are not infringed upon when integrating MPS products into any application. MPS will not assume any legal responsibility for any said applications.

MPS Proprietary Information. Patent Protected. Unauthorized Photocopy and Duplication Prohibited.
© 2021 MPS. All Rights Reserved.