Data sheet



AHM36B-BDAK012x12

AHS/AHM36

ABSOLUTE ENCODERS

SICK
Sensor Intelligence.



Illustration may differ

Ordering information

Type	part no.
AHM36B-BDAK012x12	1097801

Other models and accessories ➜ www.sick.com/AHS_AHM36

Detailed technical data

Safety-related parameters

$MTTF_D$ (mean time to dangerous failure)	230 years (EN ISO 13849-1) [1]

[1] This product is a standard product and does not constitute a safety component as defined in the Machinery Directive. Calculation based on nominal load of components, average ambient temperature 40 °C, frequency of use 8760 h/a. All electronic failures are considered hazardous. For more information, see document no. 8015532.

Performance

Number of steps per revolution (max. resolution)	4,096 (12 bit)
Number of revolutions	4,096 (12 bit)
Max. resolution (number of steps per revolution x number of revolutions)	12 bit x 12 bit (4,096 x 4,096)
Error limits G	0.35° (at 20 °C) [1]
Repeatability standard deviation σ_r	0.25° (at 20 °C) [2]

[1] In accordance with DIN ISO 1319-1, position of the upper and lower error limit depends on the installation situation, specified value refers to a symmetrical position, i.e. deviation in upper and lower direction is the same.
[2] In accordance with DIN ISO 55350-13; 68.3% of the measured values are inside the specified area.

Interfaces

Communication interface	SSI
Initialization time	100 ms [1]
Position forming time	125 µs
Process data	Position
Code type	Gray
Code sequence parameter adjustable	CW/CCW (V/R) configurable via cable
Clock frequency	2 MHz [2]
Set (electronic adjustment)	H-active (L = 0 - 3 V, H = 4,0 - U_s V)

[1] Valid positional data can be read once this time has elapsed.
[2] Minimum, LOW level (Clock +): 250 ns.

CW/CCW (counting sequence when turning)	L-active (L = 0 - 1 V, H = 2,0 - Us V)

[1] Valid positional data can be read once this time has elapsed.
[2] Minimum, LOW level (Clock +): 250 ns.

Electronics

Connection type	Cable, 8-wire, universal, 1.5 m
Supply voltage	4.5 ... 32 V DC
Power consumption	≤ 1.5 W (without load)
Reverse polarity protection	✓

Mechanics

Mechanical design	Blind hollow shaft
Shaft diameter	10 mm
Characteristics of the shaft	Front clamp
Weight	0.12 kg [1]
Shaft material	Stainless steel
Flange material	Aluminum
Housing material	Zinc
Material, cable	PUR
Start up torque	0.5 Ncm (+20 °C)
Operating torque	< 0.5 Ncm (+20 °C)
Permissible movement static	± 0.3 mm, ± 0.3 mm (radial, axial)
Permissible movement dynamic	± 0.1 mm (radial) ± 0.1 mm (axial)
Operating speed	≤ 6,000 min^{-1} [2]
Moment of inertia of the rotor	15 gcm^2
Bearing lifetime	2.0 x 10^9 revolutions
Angular acceleration	≤ 500,000 rad/s^2

[1] Based on devices with male connector.
[2] Allow for self-heating of 3.5 K per 1,000 rpm when designing the operating temperature range.

Ambient data

EMC	According to EN 61000-6-2 and EN 61000-6-3
Enclosure rating	IP65 (IEC 60529)
Permissible relative humidity	90 % (Condensation not permitted)
Operating temperature range	–20 °C ... +70 °C
Storage temperature range	–40 °C ... +100 °C, without package
Resistance to shocks	100 g, 6 ms (EN 60068-2-27)
Resistance to vibration	20 g, 10 Hz ... 2,000 Hz (EN 60068-2-6)

Classifications

ECLASS 5.0	27270502
ECLASS 5.1.4	27270502
ECLASS 6.0	27270590

ECLASS 6.2	27270590
ECLASS 7.0	27270502
ECLASS 8.0	27270502
ECLASS 8.1	27270502
ECLASS 9.0	27270502
ECLASS 10.0	27270502
ECLASS 11.0	27270502
ECLASS 12.0	27270502
ETIM 5.0	EC001486
ETIM 6.0	EC001486
ETIM 7.0	EC001486
ETIM 8.0	EC001486
UNSPSC 16.0901	41112113

Certificates

EU declaration of conformity	✓
UK declaration of conformity	✓
ACMA declaration of conformity	✓
Moroccan declaration of conformity	✓
China-RoHS	✓
cTUVus certificate	✓
Information according to Art. 3 of Data Act (Regulation EU 2023/2854)	✓

Dimensional drawing Blind hollow shaft, cable

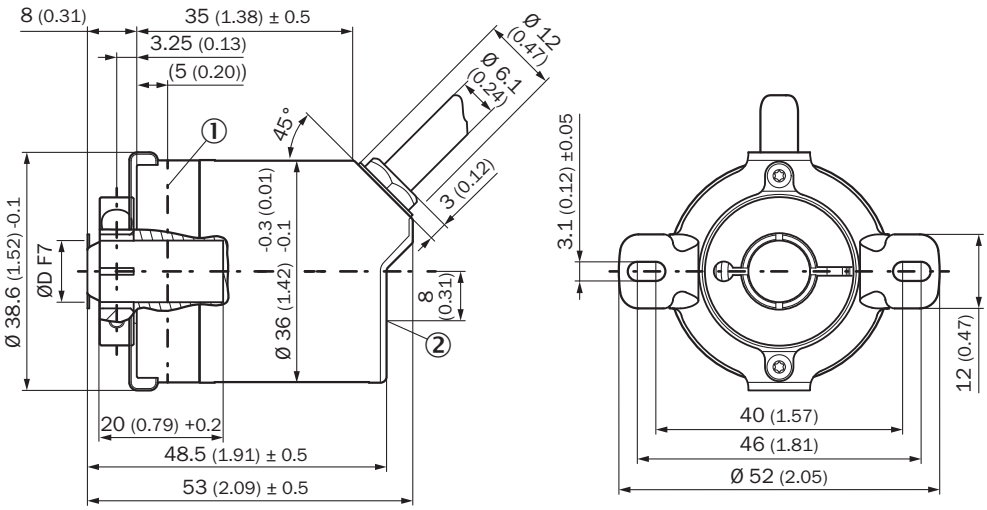

Dimensions in mm (inch)
① Measuring point for operating temperature
② measuring point for vibrations

Type	Shaft diameterØ D F7
AHx36x-BAxxxxxxxx	6 mm
AHx36x-BBxxxxxxxx	8 mm
AHx36x-BCxxxxxxxx	1/4″
AHx36x-BDxxxxxxxx	10 mm
AHx36x-BKxxxxxxxx	3/8″

Attachment specifications

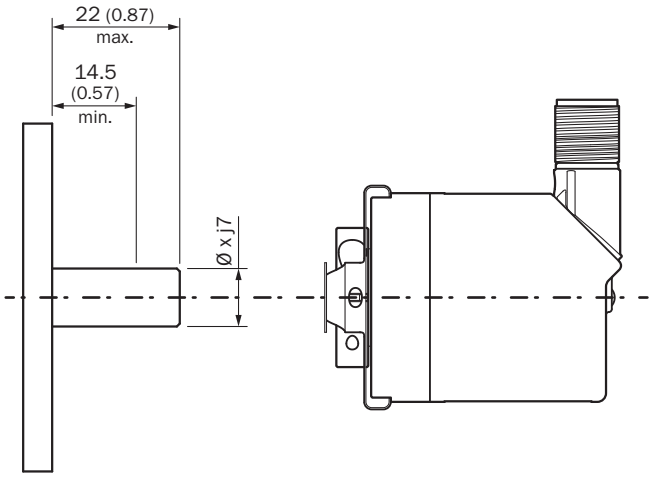

PIN assignment

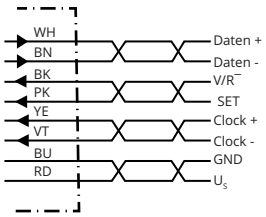

PIN	Wire colors (cable connection)	Signal	Explanation
1	Brown	Data -	Interface signals
2	White	Data +	Interface signals
3	Black	V/R	Sequence in direction of rotation
4	Pink	SET	Electronic adjustmen- tInterface signals
5	Yellow	Clock +	Interface signals
6	Purple	Clock -	Interface signals
7	Blue	GND	Ground connection
8	Red	U_S	Operating voltage
–	–	Screen	Screen connected to hous- ing on encoder side. Connect- ed to ground on control side.

Recommended accessories

Other models and accessories ➜ www.sick.com/AHS_AHM36

	Brief description	Type	part no.
Mounting systems			
	• **Product family:** Stator couplings • **Description:** Stator coupling on hole circle 63 mm	BEF-DS08	2072206
	• **Product family:** Stator couplings • **Description:** Standard stator coupling, AHS/AHM36	BEF-DS16-AHX	2108615
connectors and cables			
	• **Connection type head A:** Male connector, M12, 8-pin, straight, A-coded • **Signal type:** Incremental • **Cable:** CAT5, CAT5e • **Description:** Incremental, shielded • **Connection systems:** IDC quick connection • **Permitted cross-section:** 0.14 mm² ... 0.34 mm²	STE-1208-GA01	6044892

SICK AT A GLANCE

SICK is one of the leading manufacturers of intelligent sensors and sensor solutions for industrial applications. A unique range of products and services creates the perfect basis for controlling processes securely and efficiently, protecting individuals from accidents and preventing damage to the environment.

We have extensive experience in a wide range of industries and understand their processes and requirements. With intelligent sensors, we can deliver exactly what our customers need. In application centers in Europe, Asia and North America, system solutions are tested and optimized in accordance with customer specifications. All this makes us a reliable supplier and development partner.

Comprehensive services complete our offering: SICK LifeTime Services provide support throughout the machine life cycle and ensure safety and productivity.

For us, that is “Sensor Intelligence.”

WORLDWIDE PRESENCE:

Contacts and other locations –www.sick.com