Data sheet

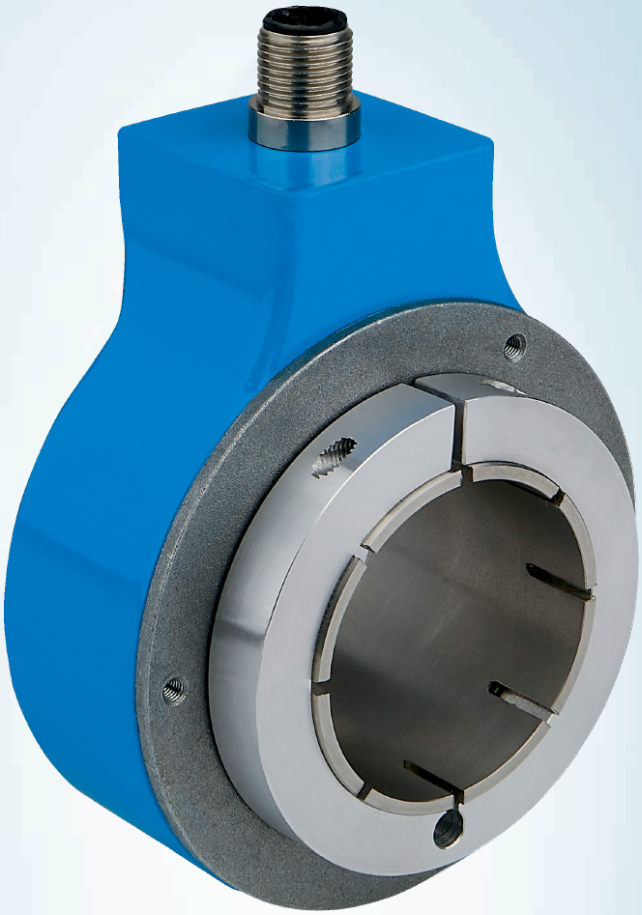

DGS80B-TYLC02500

DGS80/90

INCREMENTAL ENCODERS

SICK
Sensor Intelligence.



Illustration may differ

Ordering information

Type	part no.
DGS80B-TYLC02500	1118758

Other models and accessories ➜ www.sick.com/DGS80_90

Detailed technical data

Safety-related parameters

$MTTF_D$ (mean time to dangerous failure)	518 years (EN ISO 13849-1) [1]

[1] This product is a standard product and does not constitute a safety component as defined in the Machinery Directive. Calculation based on nominal load of components, average ambient temperature 40 °C, frequency of use 8760 h/a. All electronic failures are considered hazardous. For more information, see document no. 8015532.

Performance

Pulses per revolution	2,500
Measuring step	90°, electric/pulses per revolution
Measuring step deviation	± 15° electrical
Duty cycle	≤ 0.5 ± 15 %

Interfaces

Communication interface	Incremental
Communication Interface detail	HTL / Push pull
Number of signal channels	6-channel
Initialization time	< 50 ms
Output frequency	≤ 300 kHz
Load current	≤ 40 mA, per channel
Operating current	≤ 50 mA (without load)
Power consumption	≤ 0.85 W

Electronics

Connection type	Male connector, M12, 8-pin, radial
Supply voltage	5 ... 30 V
Reference signal, position	90°, electric, logically gated with A and B
Reverse polarity protection	✓

Short-circuit protection of the outputs	✓

Mechanics

Mechanical design	Through hollow shaft
Shaft diameter	42 mmFront clamp [1]
Flange type / stator coupling	1-sided stator coupling with slot available for order as accessory
Weight	650 g
Shaft material	Aluminum
Flange material	ZAMAC die cast
Housing material	ZAMAC die cast
Shaft sealing ring material	FKM70
Start up torque	6 Ncm (+20 °C)
Operating torque	5 Ncm (+20 °C)
Permissible shaft loading	160 N (radial) 100 N (axial)
Operating speed	≤ 3,600 min^{-1}
Moment of inertia of the rotor	877 gcm^2
Bearing lifetime	10^9 revolutions

[1] Collets (shaft reducer) available as accessories to reduce shaft sizes under 30 mm / 42 mm.

Ambient data

EMC	According to EN 61000-6-2 and EN 61000-6-3
Enclosure rating	IP65 (IEC 60529)
Permissible relative humidity	98 % (Condensation not permitted)
Operating temperature range	–25 °C ... +85 °C
Storage temperature range	–25 °C ... +85 °C, without package
Resistance to shocks	250 g, 6 ms (EN 60068-2-27)
Resistance to vibration	10 g, 5 Hz ... 2,000 Hz (EN 60068-2-6)

Classifications

ECLASS 5.0	27270501
ECLASS 5.1.4	27270501
ECLASS 6.0	27270590
ECLASS 6.2	27270590
ECLASS 7.0	27270501
ECLASS 8.0	27270501
ECLASS 8.1	27270501
ECLASS 9.0	27270501
ECLASS 10.0	27270501
ECLASS 11.0	27270501
ECLASS 12.0	27270501
ETIM 5.0	EC001486
ETIM 6.0	EC001486
ETIM 7.0	EC001486

ETIM 8.0	EC001486
UNSPSC 16.0901	41112113

Certificates

EU declaration of conformity	✓
UK declaration of conformity	✓
ACMA declaration of conformity	✓
China-RoHS	✓
cRUus certificate	✓

Dimensional drawing Bore hole size 42 mm, M12 male connector

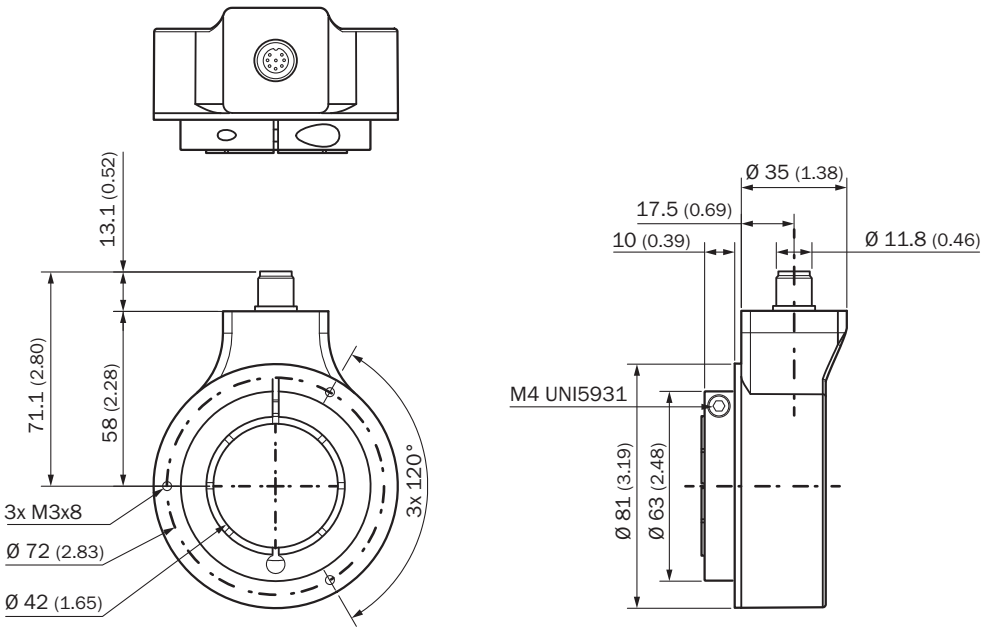

Dimensions in mm (inch)

PIN assignment

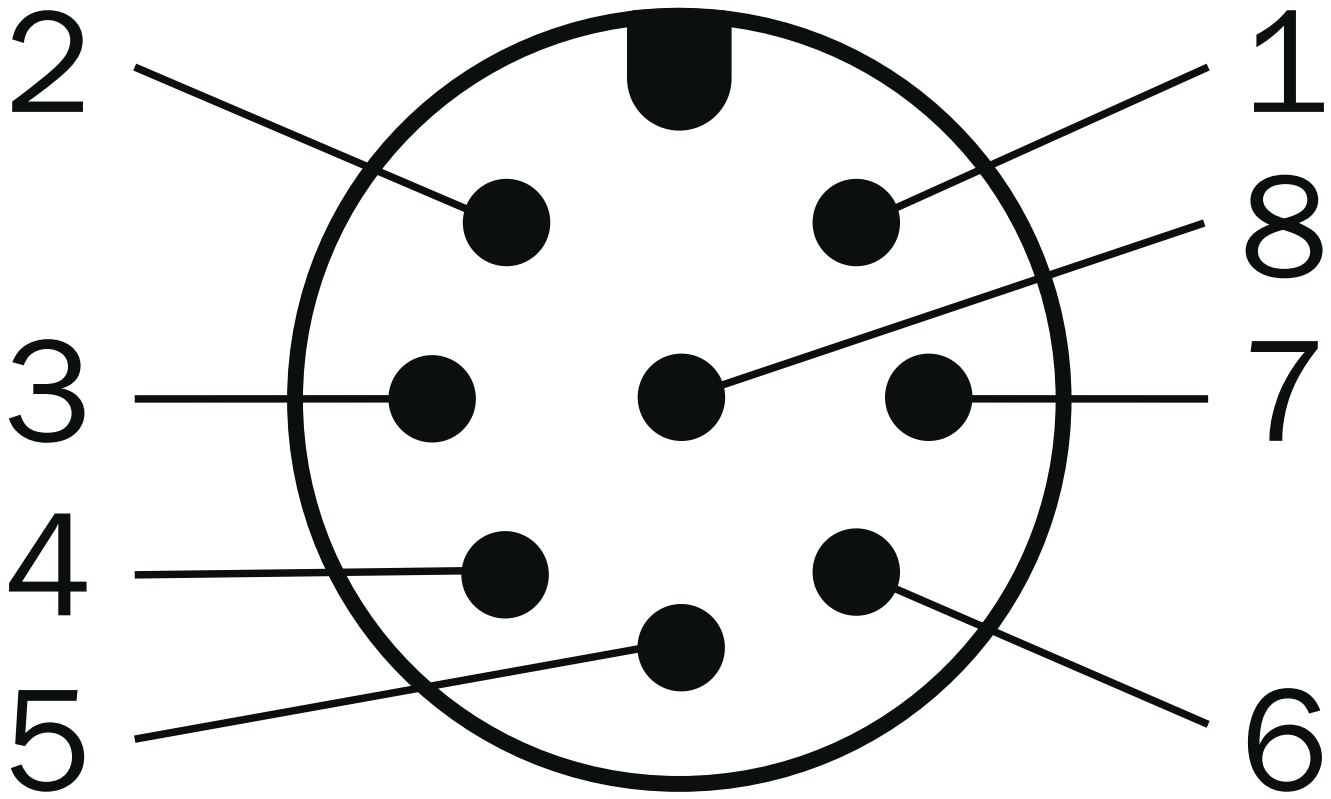

Wire colors (cable connection)	PINMale connector M12, 8-pin	PINMale connector M23, 12-pin	PINMS male connector, 10-pin	Signal	Explanation
Brown	1	6	H	A-	Signal cable
White	2	5	A	A	Signal cable
Black	3	1	I	B-	Signal cable
Pink	4	8	B	B	Signal cable
Yellow	5	4	J	Z-	Signal cable
Purple	6	3	C	Z	Signal cable
Blue	7	10	F	GND	Ground connection
Red	8	12	D	$+U_S$	Supply voltage
-	-	2	E	N.c.	Not connected
-	-	7	-	N.c.	Not connected
-	-	-	G	Housing	Housing
-	-	9	-	N.c.	Not connected
-	-	11	-	N.c.	Not connected
Screen	–	–	–	Screen	Screen connected to housing on encoder side

Recommended accessories

Other models and accessories ➜ www.sick.com/DGS80_90

	Brief description	Type	part no.
Mounting systems			
	• **Product family:** Stator couplings • **Description:** 1-sided stator coupling, slot, 115 mm • **Details:** Stainless steel 1.4301 (AISI 304) • **Items supplied:** 1 x stator coupling, 3 x M3 screws, 1 x insulating washer for stator coupling	DGS80-TETHER-A	2122697
	• **Product family:** Stator couplings • **Description:** 1-sided stator coupling, slot, 84 mm • **Details:** Stainless steel 1.4301 (AISI 304) • **Items supplied:** 1 x stator coupling, 3 x M3 screws, 1 x insulating washer for stator coupling	DGS80-TETHER-B	2122698
	• **Product segment:** Shaft adaptation • **Product family:** Shaft couplings • **Description:** 1-sided stator coupling, slot, 67 mm	DGS80-TETHER-C	2135677
shaft adaptation			
	• **Product segment:** Shaft adaptation • **Product:** Collets • **Description:** Collet for through hollow shaft, shaft diameter 30 mm, external diameter 42 mm	SPZ-042-030-M	2123008
	• **Product segment:** Shaft adaptation • **Product:** Collets • **Description:** Collet for through hollow shaft, shaft diameter 32 mm, external diameter 42 mm	SPZ-042-032-M	2123009
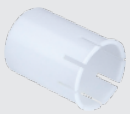	• **Product segment:** Shaft adaptation • **Product:** Collets • **Description:** Collet for through hollow shaft, shaft diameter 35 mm, external diameter 42 mm	SPZ-042-035-M	2123010
	• **Product segment:** Shaft adaptation • **Product:** Collets • **Description:** Collet for through hollow shaft, shaft diameter 38 mm, external diameter 42 mm	SPZ-042-038-M	2123011
	• **Product segment:** Shaft adaptation • **Product:** Collets • **Description:** Collet for through hollow shaft, shaft diameter 40 mm, external diameter 42 mm	SPZ-042-040-M	2123012
	• **Product segment:** Shaft adaptation • **Product:** Collets • **Description:** Collet for through hollow shaft, shaft diameter 1 1/8 ", external diameter 42 mm	SPZ-042-118Z-M	2143603

SICK AT A GLANCE

SICK is one of the leading manufacturers of intelligent sensors and sensor solutions for industrial applications. A unique range of products and services creates the perfect basis for controlling processes securely and efficiently, protecting individuals from accidents and preventing damage to the environment.

We have extensive experience in a wide range of industries and understand their processes and requirements. With intelligent sensors, we can deliver exactly what our customers need. In application centers in Europe, Asia and North America, system solutions are tested and optimized in accordance with customer specifications. All this makes us a reliable supplier and development partner.

Comprehensive services complete our offering: SICK LifeTime Services provide support throughout the machine life cycle and ensure safety and productivity.

For us, that is “Sensor Intelligence.”

WORLDWIDE PRESENCE:

Contacts and other locations –www.sick.com