1054869-1 ✔ ACTIVE

AMP | SMA

TE Internal #: 1054869-1

In-Series Adapter, Straight, SMA Side A, Jack Side A, SMA Side B, Jack Side B, 1 Position, SMA

View on TE.com >

Connectors > Connector Accessories > Connector Adapters & Connector Savers

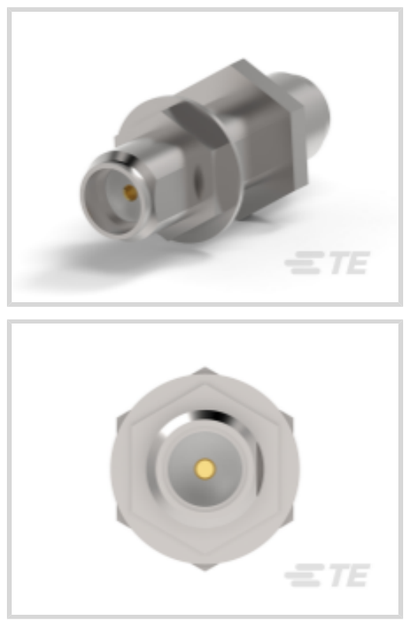
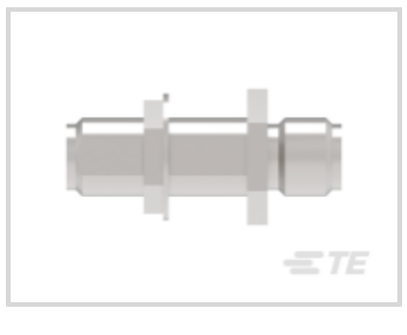



Connector Interface Adapter Type: **In-Series Adapter**

Body Orientation: **Straight**

Side A Interface: **SMA**

Side A Gender: **Jack**

Side B Interface: **SMA**

Features

Product Type Features

Connector Interface Adapter Type	In-Series Adapter
Side A Interface	SMA
Side A Gender	Jack
Side B Interface	SMA
Side B Gender	Jack
Connector System	Cable-to-Cable
Sealable	No

Configuration Features

Number of Positions	1

Electrical Characteristics

Impedance	50 Ω

Body Features

Body Material	Stainless Steel
Body Plating Finish	Passivated

Contact Features

RF Connector Center Contact Material	Beryllium Copper
RF Connector Center Contact Plating Material	Gold (Au)

Mechanical Attachment

RF Contact Captivation Method	Epoxy
Panel Attachment Style	Rear Mount
Connector Mounting Type	Panel Mount

Housing Features

Body Orientation	Straight

Dimensions

Product Length	22.2 mm[.874 in]

Usage Conditions

Operating Temperature Range	-65 – 165 °C[-85 – 329 °F]

Operation/Application

Operating Frequency Range	18 GHz
Circuit Application	Power & Signal

Packaging Features

Packaging Method	Bag

Other

Dielectric Material	TFE Fluorocarbon

Compatible Parts



TE Part # 1050859-1
2002 5016 00



TE Part # 1056462-1
2837 7388 02



TE Part # 1056456-1
2837 7316 02



TE Part # 1052098-1
2037 5100 02

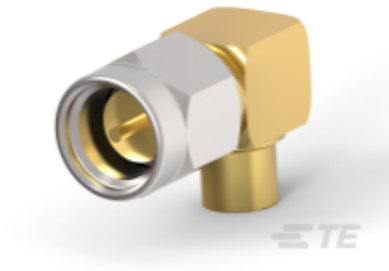

TE Part # 1051110-1
2007 5054 02

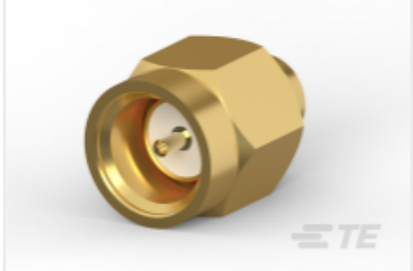

TE Part # 1050524-1
2001 5003 00,SMA CABLE PLUG



TE Part # 1050525-1
2001 5003 02,SMA CABLE PLUG



TE Part # 1053265-1
2058 5329 02

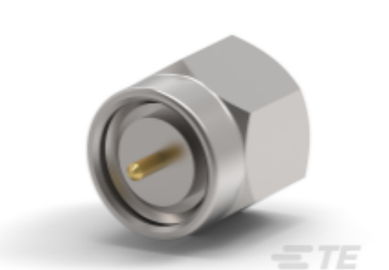

TE Part # 1050602-1
2001 5395 02



TE Part # 1052066-1
2037 5006 00,SMA RA CABLE PLUG



TE Part # 1050547-1
2001 5032 00



TE Part # 1053265-2
2058 5329 02



TE Part # 1052075-1
2037 5008 00,SMA RA CABLE PLUG



TE Part # 1050720-1
2001 7188 00

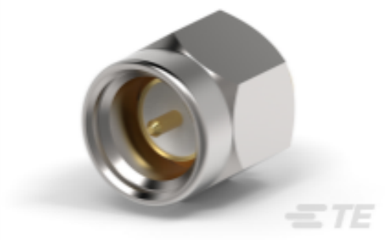

TE Part # 1050548-1
2001 5032 02



TE Part # 1052633-1
2052 3356 00



TE Part # 1051664-1
2031 5012 00

Also in the Series | SMA

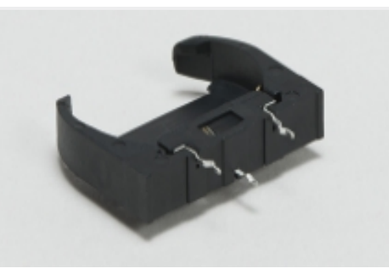

Battery Holders(1)



Connector Adapters & Connector Savers(8)



Connector Caps & Covers(3)



Connector Strain Relief(1)

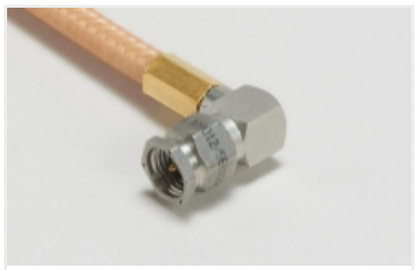

RF Cable Assemblies(119)

Customers Also Bought

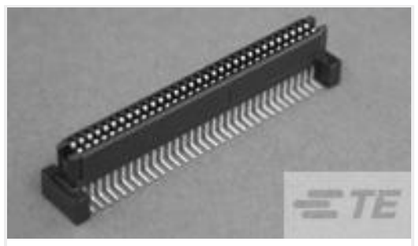

TE Part #1-120529-1
1FHR,64,50A/P,N,C,S11,12

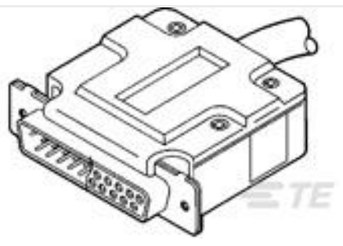

TE Part #207467-2
CABLE CLAMP ASSY,SZ 1,BULK PKG



TE Part #859527-2
LGH RECEPT., FLANGED, H.V.



TE Part #2000676-3
Keyed Guide Pin, Machined, Vita 46



TE Part #2478083-1
SMA Jack to SMA Jack Hermetic Bulkhead

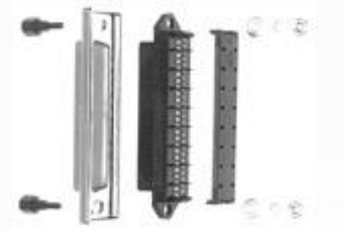

TE Part #5553636-2
KIT,HDW,EMI,050/085,STD/METRIC



TE Part #1-6450869-0
V/R 2ACP+8S+4ACP+16S+2ACP+12S+2ACP



TE Part #5554349-1
EMI RCPT ASSY, 24 POS, SHLD



TE Part #579401-000
ECS-0101



TE Part #2102522-3
MULTIGIG RT2 SLIM GHW,SOCKET, 210,SPRING

Documents

CAD Files

Customer View Model

ENG_CVM_1054869-1_B.2d_dxf.zip

English

3D PDF

English

Customer View Model

ENG_CVM_1054869-1_B.3d_igs.zip

English

Customer View Model

ENG_CVM_1054869-1_B.3d_stp.zip

English

Customer View Model

ENG_CVM_CVM_1054869-1_B.2d_dxf.zip

English

Customer View Model

ENG_CVM_CVM_1054869-1_B.3d_igs.zip

English

Customer View Model

ENG_CVM_CVM_1054869-1_B.3d_stp.zip

English

3D PDF

3D

By downloading the CAD file I accept and agree to the **Terms and Conditions** of use.

Datasheets & Catalog Pages

SMA Connectors

English

Product Specifications

Product Specification

English

Product Specification

English