

Inductive sensor
NCN50-FP-A2-P3

- Comfort series
- 50 mm non-flush

Dimensions

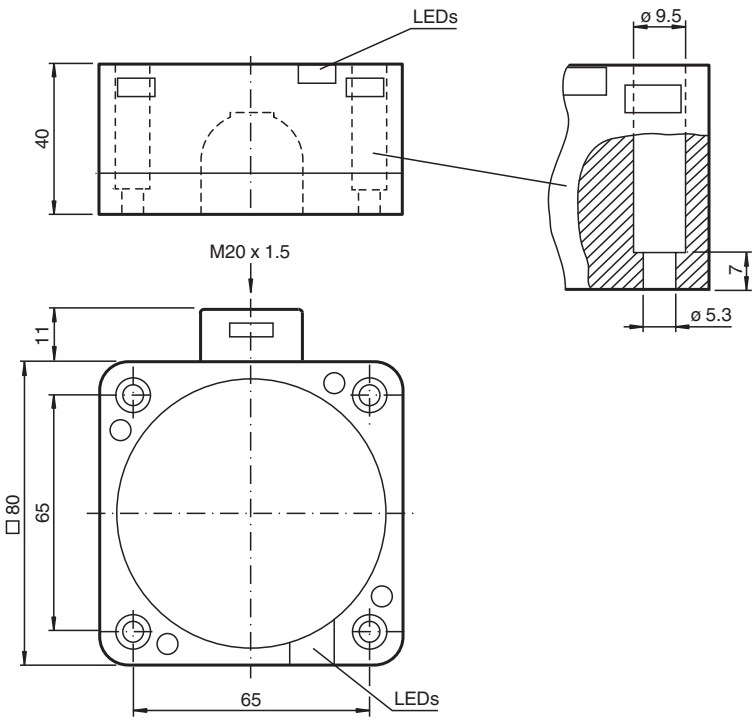

Technical Data

General specifications		
Switching function		complementary
Output type		PNP
Rated operating distance	s_n	50 mm
Installation		non-flush
Output polarity		DC
Assured operating distance	s_a	0 ... 40.5 mm
Reduction factor r_{Al}		0.4
Reduction factor r_{Cu}		0.3
Reduction factor r_{304}		0.85

Release date: 2024-05-27 Date of issue: 2024-05-31 Filename: 129435_eng.pdf

Technical Data

Output type		4-wire
Nominal ratings		
Operating voltage	U_B	10 ... 60 V
Switching frequency	f	0 ... 80 Hz
Hysteresis	H	typ. 3 %
Reverse polarity protection		reverse polarity protected
Short-circuit protection		pulsing
Voltage drop	U_d	≤ 3 V
Operating current	I_L	0 ... 200 mA
Off-state current	I_r	0 ... 0.5 mA
No-load supply current	I_0	≤ 20 mA
Time delay before availability	t_v	≤ 300 ms
Operating voltage indicator		LED, green
Switching state indicator		LED, yellow
Functional safety related parameters		
$MTTF_d$		680 a
Mission Time (T_M)		20 a
Diagnostic Coverage (DC)		0 %
Compliance with standards and directives		
Standard conformity		
Standards		EN IEC 60947-5-2
Approvals and certificates		
UL approval		cULus Listed, General Purpose
Ambient conditions		
Ambient temperature		-25 ... 70 °C (-13 ... 158 °F)
Mechanical specifications		
Connection type		screw terminals
Information for connection		A maximum of two conductors with the same core cross section may be mounted on one terminal connection! tightening torque 1.2 Nm + 10 %
Core cross section		up to 2.5 mm²
Minimum core cross-section		without wire end ferrules 0.5 mm² , with connector sleeves 0.34 mm²
Maximum core cross-section		without wire end ferrules 2.5 mm² , with connector sleeves 1.5 mm²
Housing material		PBT/base of metal
Sensing face		PBT
Housing base		aluminum painted
Degree of protection		IP68
Tightening torque, housing screws		1 Nm
Dimensions		
Height		40 mm
Width		80 mm
Length		80 mm

Connection

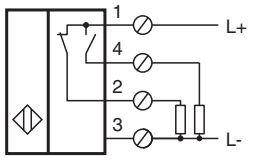

Release date: 2024-05-27 Date of issue: 2024-05-31 Filename: 129435_eng.pdf