GlobTek, Inc. www.globtek.com 186 Veterans Drive, Northvale, NJ 07647 Tel. (201) 784-1000 Fax (201) 784-0111	Drawing Title: USB-C (USB TYPE-C) USB 3.2 Gen 2 (USB 3.1 Gen 2, Superspeed + (USB 3.1)) Receptacle Connector 6 Position Waterproof IPX7 Surface Mount, Right Angle; Through Hole, 450-01290404(R)	
	Model No. Connector	
	Part No./Ordering No. JACK-USBC-141TH-4BAC10	Rev A2

In Addition to GlobTek Inc.'s renewed ISO9001:2008 - Quality Management System Certification, GlobTek Inc. is now certified to:

ISO13485:2003 - Medical Devices Quality Management System Certification
ISO14001:2004 - Environmental Management System Certification

ISO Certificates are available online at http://www.globtek.com/iso-certificates/

The acceptance of this specification and use of the product described in this document indicates the acceptance and binding of the customer to Globtek TERMS AND CONDITIONS (attached to the end of this document), which supersede all other agreements, terms, and conditions (http://www.globtek.com/terms-and-conditions/).
Prop 65 Statement:https://www.globtek.com/prop-65-statement.pdf

Footnote:

GlobTek Inc. will not be liable for the safety and performance of these power supplies if unauthorized access and repair occurs. End user should consult applicable UL, CSA or EN standards for proper installation instruction.

Limitation of Use:

GlobTek products are intended for use with commercial, medical, and/or industrial equipment only. GlobTek product are not authorized for use as mission critical components in life support hazardous environment, nuclear or aircraft applications without prior written approval from the CEO of GlobTek Inc.
Contents of this document are subject to change without prior notice.

Customer Approval of Specification:

Please approve, sign and send back to GlobTek so we can complete order processing.
A delay in receipt of this form will delay delivery schedule.

Company Name:	Customer P/N:
Quote Number:	Date:
Authorized Representative Name:	Authorized Representative Signature:

PROPRIETARY INFORMATION
PROPRIETARY OF GLOBTEK, INC. ANY REPRODUCTION, DISCLOSURE OR USE OF THIS DRAWING, IN WHOLE OR IN PART, IS HEREBY PROHIBITED EXCEPT AS SPECIFIED IN WRITING BY GLOBTEK, INC. © GlobTek, Inc. 2022 - 2024
guest /06/29/2024 9:49:17 AM CLONED FROM JACK-USBC-SMT-33141-2FS

GlobTek, Inc.
www.globtek.com
186 Veterans Drive,
Northvale, NJ 07647
Tel. (201) 784-1000
Fax (201) 784-0111

Drawing Title: USB-C (USB TYPE-C) USB 3.2 Gen 2 (USB 3.1 Gen 2, Superspeed + (USB 3.1)) Receptacle Connector 6 Position Waterproof IPX7 Surface Mount, Right Angle; Through Hole, 450-01290404(R)	
Model No. Connector	
Part No./Ordering No. JACK-USBC-141TH-4BAC10	Rev A2

REVISION HISTORY

REV	DESCRIPTION	SUB	DATE	APPROVED
A2	Update the box quantity information	QA	06/20/2024	QA
A1	Update Product description in the Drawing title	QA	06/06/2024	QA
A	Initial release	QA	07/28/2022	QA

3D CAD FILE:
https://www.globtek.com/file/dl/jack-usbc-141th-4bac10.stp

AGENCY ONLINE DOCUMENTS

RoHS/RoHS3 Declaration	https://www.globtek.com/pdf/rohs_cert/01t3a000005hUdNAAU
REACH Declaration	https://www.globtek.com/pdf/iso_certificates/REACH.pdf
Conflict Minerals Declaration	https://www.globtek.com/pdf/conflict-minerals.pdf
Prop 65 Statement	https://en.globtek.com/prop-65-statement.pdf

IPXY rating is based on 3rd party testing and customers should check suitability and test system level IPXY rating before ordering.

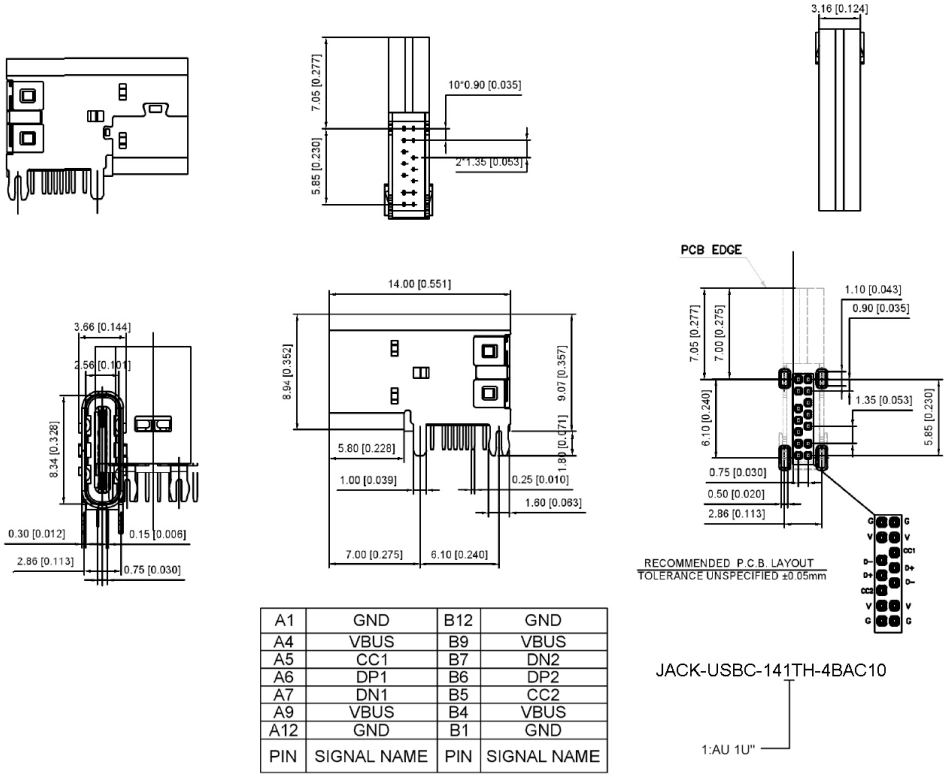

PIN	SIGNAL NAME	PIN	SIGNAL NAME
A1	GND	B12	GND
A4	VBUS	B9	VBUS
A5	CC1	B7	DN2
A6	DP1	B6	DP2
A7	DN1	B5	CC2
A9	VBUS	B4	VBUS
A12	GND	B1	GND

JACK-USBC-141TH-4BAC10

1:AU 1U"

PROPRIETARY INFORMATION
PROPRIETARY OF GLOBTEK, INC. ANY REPRODUCTION, DISCLOSURE OR USE OF THIS DRAWING, IN WHOLE OR IN PART, IS HEREBY PROHIBITED EXCEPT AS SPECIFIED IN WRITING BY GLOBTEK, INC. © GlobTek, Inc. 2022 - 2024
guest /06/29/2024 9:49:17 AM CLONED FROM JACK-USBC-SMT-33141-2FS

Material:
Housing Material: High temperature thermoplastic UL94V-), Black
Contact Terminal Copper Alloy
Metallic Shell: Stainless Steel
Inner Ground Cover Shell: Stainless Steel
Plating
Data Contact
Underplating: 50µ” Min. Nicklel
Contact Plating: Gold Flash
Solder Area: 80µ” Matte Tin
Shell
Metallic Shell: 50µ”Min. Nickel
Electrical
Voltage Rating: 20V Dc
Current Rating: Vbus pins collectively 3.00A, GND pins collectively 4.25A,
B5 pin 1.25A, Other pins 0.25A per pin.
Contact Resistance: 40mΩ Max.
Insulation resistance: 100 MΩ Min.
Dielectric withstanding voltage: 100V AC/Minute
Mechanical Durablity: 3,000cycles
Mating Force: 5 to 20N
Unmating Force: 8 to 20N after test
Environmental and Processing
Operating Temperature: -40°C to +85°C

Temperature Life, Vibration, Cyclic Temperature and Humidity, Thermal Shock, Mixed Flowing Gas and etc.:
https://www.globtek.com/pdf/ENVIRONMENTAL.pdf

PROPRIETARY INFORMATION
PROPRIETARY OF GLOBTEK, INC. ANY REPRODUCTION, DISCLOSURE OR USE OF THIS DRAWING, IN WHOLE OR IN PART, IS HEREBY PROHIBITED EXCEPT AS SPECIFIED IN WRITING BY GLOBTEK, INC. © GlobTek, Inc. 2022 - 2024
guest /06/29/2024 9:49:17 AM CLONED FROM JACK-USBC-SMT-33141-2FS

GlobTek, Inc. www.globtek.com 186 Veterans Drive, Northvale, NJ 07647 Tel. (201) 784-1000 Fax (201) 784-0111	Drawing Title: USB-C (USB TYPE-C) USB 3.2 Gen 2 (USB 3.1 Gen 2, Superspeed + (USB 3.1)) Receptacle Connector 6 Position Waterproof IPX7 Surface Mount, Right Angle; Through Hole, 450-01290404(R)	
	Model No. Connector	
	Part No./Ordering No. JACK-USBC-141TH-4BAC10	Rev A2

Packing:

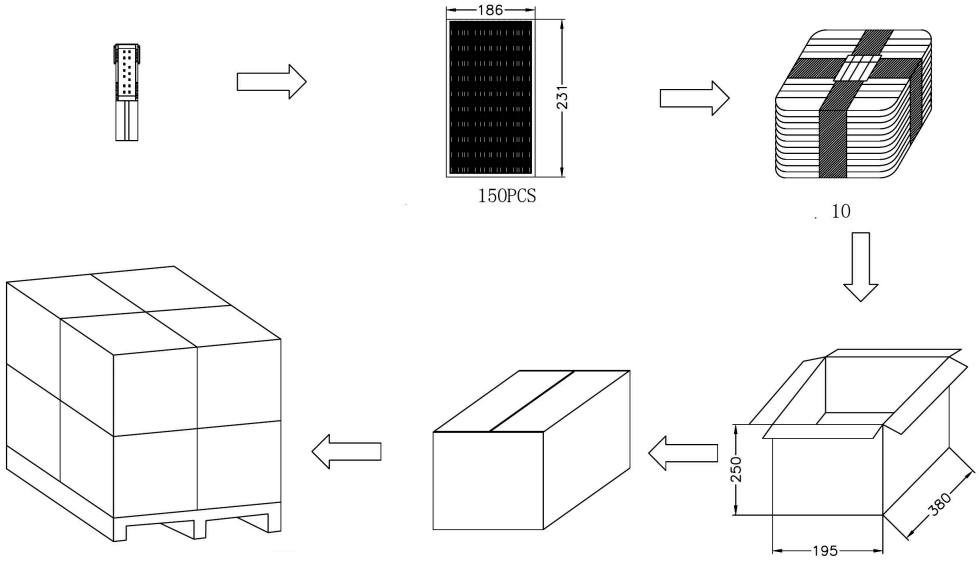

1. 2.31*1.86*0.8/CM
2. 150PCS
   6000PCS
3. 38*25*19.5CM

PROPRIETARY INFORMATION
PROPRIETARY OF GLOBTEK, INC. ANY REPRODUCTION, DISCLOSURE OR USE OF THIS DRAWING, IN WHOLE OR IN PART, IS HEREBY PROHIBITED EXCEPT AS SPECIFIED IN WRITING BY GLOBTEK, INC. © GlobTek, Inc. 2022 - 2024
guest /06/29/2024 9:49:17 AM CLONED FROM JACK-USBC-SMT-33141-2FS

GlobTek, Inc.
www.globtek.com
186 Veterans Drive,
Northvale, NJ 07647
Tel. (201) 784-1000
Fax (201) 784-0111

Drawing Title: USB-C (USB TYPE-C) USB 3.2 Gen 2 (USB 3.1 Gen 2, Superspeed + (USB 3.1)) Receptacle Connector 6 Position Waterproof IPX7 Surface Mount, Right Angle; Through Hole, 450-01290404(R)	
Model No. Connector	
Part No./Ordering No. JACK-USBC-141TH-4BAC10	Rev A2

PACKAGING

Packing Spec P/N:	
Box Qty:	150
Gift Box Size (mm):	
Gift Box Color:	White
Master Carton Size (mm):	380 x 250 x 195
Master Carton Cubic Volume (m^3):	0.02
Master GW (Kg):	6.0 kg
wt Ea. (Kg):	0.04 kg
wt Ea. (Kg):	0.09 kg
LABEL SPECS: ,	
PACK SPEC:	

PROPRIETARY INFORMATION
PROPRIETARY OF GLOBTEK, INC. ANY REPRODUCTION, DISCLOSURE OR USE OF THIS DRAWING, IN WHOLE OR IN PART, IS HEREBY PROHIBITED EXCEPT AS SPECIFIED IN WRITING BY GLOBTEK, INC. © GlobTek, Inc. 2022 - 2024
guest /06/29/2024 9:49:17 AM CLONED FROM JACK-USBC-SMT-33141-2FS