177627-1 ✔ ACTIVE

Positive Lock | Positive Lock 250

TE Internal #: 177627-1

Receptacle Terminal Housing, 1 Position, Straight, Natural, UL 94V-0, Nylon, Cable Mount (Free-Hanging), Positive Lock 250

View on TE.com >

Terminals & Splices > Terminal Housings, Insulation Sleeves & Blocks > Crimp Terminal Housings

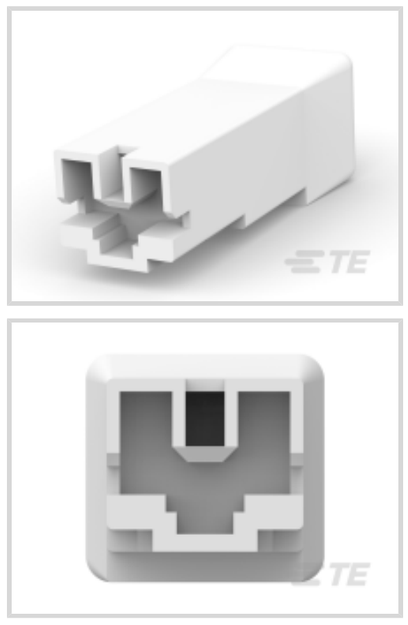




Terminal Type: **Receptacle**

Connector & Housing Type: **Receptacle**

Number of Positions: **1**

Terminal Orientation: **Straight**

UL Flammability Rating: **UL 94V-0**

Features

Product Type Features

Connector & Contact Terminates To	Wire & Cable
Sealable	No
Connector System	Wire-to-Board, Wire-to-Wire
Connector & Housing Type	Receptacle

Configuration Features

Number of Positions	1

Body Features

Primary Product Color	Natural

Contact Features

Terminal Type	Receptacle
Terminal Orientation	Straight
Contact Mating Retention	Without

Mechanical Attachment

Mating Alignment Type	Polarization

Mating Alignment	With
Connector Mounting Type	Cable Mount (Free-Hanging)

Housing Features

Housing Material	Nylon

Usage Conditions

Operating Temperature Range	-40 – 105 °C[-40 – 221 °F]

Industry Standards

UL Flammability Rating	UL 94V-0

Packaging Features

Packaging Quantity	1000

Product Compliance

For compliance documentation, visit the product page on TE.com>

EU RoHS Directive 2011/65/EU	Compliant
EU ELV Directive 2000/53/EC	Compliant
China RoHS 2 Directive MIIT Order No 32, 2016	No Restricted Materials Above Threshold
EU REACH Regulation (EC) No. 1907/2006	Current ECHA Candidate List: JUNE 2025 (250) Candidate List Declared Against: JUNE 2025 (250) SVHC > Threshold: Melamine (3% in 23412681598) **Article Safe Usage Statements:** Wash thoroughly after handling. Do not handle until all safety precautions have been read and understood. Recycle if possible and dispose of the article by following all applicable governmental regulations relevant to your geographic location.
Halogen Content	Low Halogen - Br, Cl, F < 900 ppm per homogenous material. Also BFR/CFR/PVC Free
Solder Process Capability	Not applicable for solder process capability

Product Compliance Disclaimer

This information is provided based on reasonable inquiry of our suppliers and represents our current actual knowledge based on the information they provided. This information is subject to change. The part numbers that TE has identified as EU RoHS compliant have a maximum concentration of 0.1% by weight in homogenous materials for lead, hexavalent chromium, mercury, PBB, PBDE, DBP, BBP, DEHP, DIBP, and 0.01% for cadmium, or qualify for an exemption to these limits as defined in the Annexes of Directive 2011/65/EU (RoHS2). Finished electrical and electronic equipment products will be CE marked as required by Directive 2011/65/EU. Components may not be CE marked. Additionally, the part numbers that TE has identified as EU ELV compliant have a maximum concentration of 0.1% by weight in homogenous materials for lead, hexavalent chromium, and mercury, and 0.01% for cadmium, or qualify for an exemption to these limits as defined in the Annexes of Directive 2000/53/EC (ELV). Regarding the REACH Regulation, the information TE provides

on SVHC in articles for this part number is based on the latest European Chemicals Agency (ECHA) 'Guidance on requirements for substances in articles' posted at this URL: https://echa.europa.eu/guidance-documents/guidance-on-reach

Compatible Parts



TE Part # 170328-1
250 PL MKII REC. 18-14AWG PTBR



TE Part # 170327-1
250 PL MKII REC. 22-18AWG PTBR

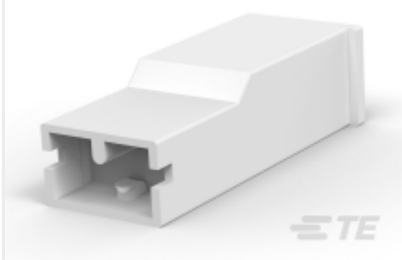

TE Part # 1-2133341-2
250 HSG. PL MKI REC. NAT



TE Part # 170334-1
250 PL MIII,REC.,18-14 AWG,PTBR

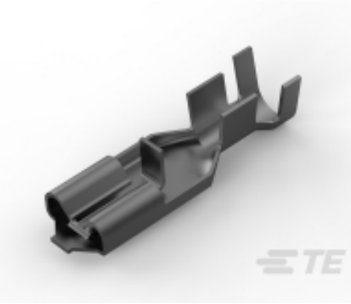

TE Part # 170335-1
PL 250 RECEPTACLE 15-10 AWG PTPBR



TE Part # 170333-1
PL 250 RECEPTACLE 22-18 AWG PTPBR



TE Part # 927076-1
PL HOUSING 0.6 PA 6.6 + PE-GF13 BLACK

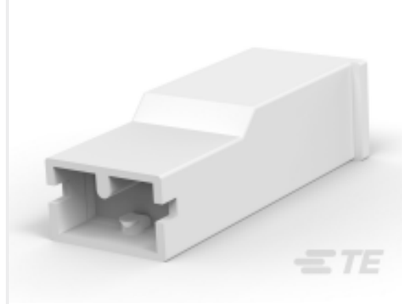

TE Part # 1-2133341-1
PL MK1 RECEPTACLE NATURAL 6.6 PA



TE Part # 170329-1
250 PL MKII REC. 15-10AWG PTBR



TE Part # 2238156-1
POS LOCK 250 Rec, MKII, 22-18 TPBR

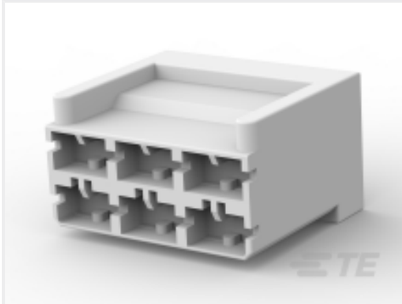

TE Part # 926330-3
6P POS-LOCK BU GEH



TE Part # 2238155-1
POS LOCK 250 Rec, MKII, 18-14 TPBR

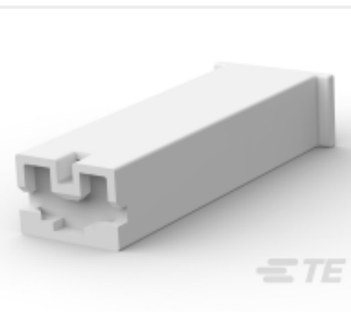

TE Part # 928083-1
PL 187 REC HSG 1P NYLON NAT

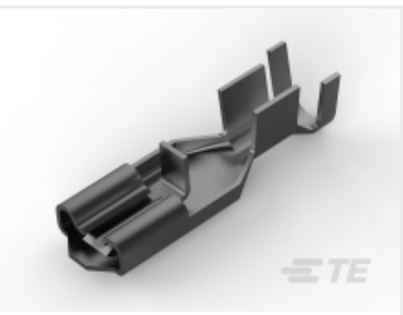

TE Part # 63239-1
POSITIVE LOCK 250 REC 12-10 AWG TPBR

Also in the Series | Positive Lock 250

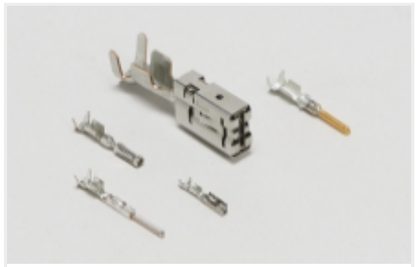

Automotive Terminals(1)

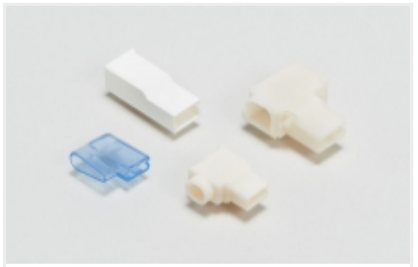

Crimp Terminal Housings(176)



Insertion & Extraction Tools(3)



Insulation Boots & Sleeves(5)



Quick Disconnects(171)

Customers Also Bought

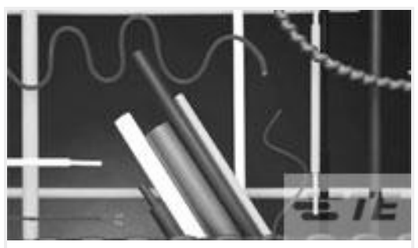

TE Part #1630834001
CGPT-3/1-0-SP



TE Part #41802
250 FASTON FLAG REC 18-12 AWG TPBR



TE Part #42563-2
250 FASTON FLAG REC 12-10 AWG TPBR



TE Part #170011-2
RING STRIP 18-14 MM2 0.503 X 11.938 TPBR

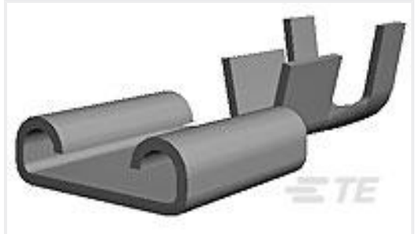

TE Part #170183-2
250 FASTON,REC.,22-18 AWG,TPBR

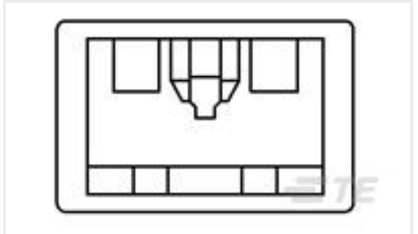

TE Part #1318954-6
250 HSG. PL EX REC. BLUE



TE Part #CAT-C339-SB19B
Wirewound Resistor: Vertical Mount

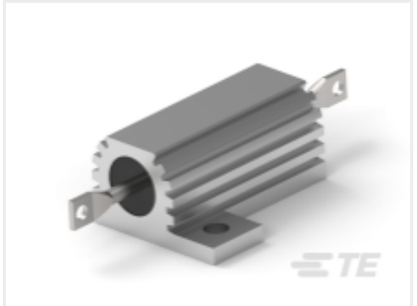

TE Part #CAT-C339-T419
Power Resistor: Aluminum Housed, 75 Watt

Documents

Product Drawings

PL .250 (6.3 MM) HOUSING RECEPTACLE

English

CAD Files

3D PDF

3D

Customer View Model

ENG_CVM_CVM_177627-1_C.2d_dxf.zip

English

Customer View Model

ENG_CVM_CVM_177627-1_C.3d_igs.zip

English

Customer View Model

ENG_CVM_CVM_177627-1_C.3d_stp.zip

English

By downloading the CAD file I accept and agree to the Terms and Conditions of use.

Datasheets & Catalog Pages

Positive Lock Receptacles

English

Agency Approvals

UL Report

English