PTSM 0,5/ 6-HTB-2,5-SMD WH R44 - PCB header

1830168

https://www.phoenixcontact.com/us/products/1830168

Please be informed that the data shown in this PDF document is generated from our online catalog. Please find the complete data in the user documentation. Our general terms of use for downloads are valid.



PCB headers, nominal cross section: 0.5 mm^2, color: signal white, nominal current: 6 A, rated voltage (III/2): 160 V, contact surface: Tin, contact connection type: Pin, number of potentials: 6, number of rows: 1, number of positions: 6, number of connections: 6, product range: PTSM 0,5/.. -HTB-SMD WH, pitch: 2.5 mm, mounting: SMD soldering, pin layout: Linear pad geometry, number of solder pins per potential: 1, plug-in system: COMBICON PTSM, Pin connector pattern alignment: Standard, locking: without, mounting: without, type of packaging: 44 mm wide tape

Your advantages

- White design: Stable color when welding and during use
- Designed for integration into the SMT soldering process
- Supplied in tape-on-reel packing according to IEC 60286-3 for automated mounting
- Additional solder anchors reduce the mechanical strain on the soldering spots
- Through-board header for low plug-in connection height on the PCB

Commercial data

Item number	1830168
Packing unit	330 pc
Minimum order quantity	330 pc
Sales key	AA01
Product key	AAAUTA
Catalog page	Page 23 (NTK-2014)
GTIN	4046356884563
Weight per piece (including packing)	2.831 g
Weight per piece (excluding packing)	2.069 g
Customs tariff number	85366930
Country of origin	IN

Technical data

Product properties

Product type	PCB headers
Product family	PTSM 0,5/..-HTB-SMD WH
Product line	COMBICON Connectors XS
Type	Standard
Number of positions	6
Pitch	2.5 mm
Number of connections	6
Number of rows	1
Number of potentials	6
Mounting flange	without
Pin layout	Linear pad geometry
Solder pins per potential	1

Electrical properties

Nominal current I_N	6 A
Nominal voltage U_N	160 V
Contact resistance	2.4 mΩ
Rated voltage (III/3)	125 V
Rated surge voltage (III/3)	2.5 kV
Rated voltage (III/2)	160 V
Rated surge voltage (III/2)	2.5 kV
Rated voltage (II/2)	250 V
Rated surge voltage (II/2)	2.5 kV

Mounting

Mounting type	SMD soldering
Pin layout	Linear pad geometry

Processing notes

Process	Reflow soldering
Moisture Sensitive Level	MSL 1
Classification temperature T_c	260 °C
Solder cycles in the reflow	3

Material specifications

Material data - contact

Note	WEEE/RoHS-compliant, free of whiskers according to IEC 60068-2-82/JEDEC JESD 201
Contact material	Cu alloy
Surface characteristics	Tin-plated
Metal surface contact area (top layer)	Tin (3 - 5 µm Sn)

Metal surface contact area (middle layer)	Nickel (1.3 - 3 µm Ni)
Metal surface soldering area (top layer)	Tin (3 - 5 µm Sn)
Metal surface soldering area (middle layer)	Nickel (1.3 - 3 µm Ni)

Material data - housing

Color (Housing)	signal white (9003)
Insulating material	PA
Insulating material group	I
CTI according to IEC 60112	600
Flammability rating according to UL 94	V0

Dimensions

Dimensional drawing	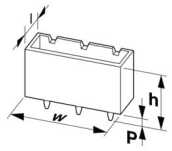
Pitch	2.5 mm
Width [w]	19.7 mm
Height [h]	8.2 mm
Length [l]	9.5 mm
Installed height	8.2 mm

PCB design

Pad geometry	1.2 x 2.5 mm

Mechanical tests

Visual inspection

Specification	IEC 60512-1-1:2002-02
Result	Test passed

Dimension check

Specification	IEC 60512-1-2:2002-02
Result	Test passed

Resistance of inscriptions

Specification	IEC 60068-2-70:1995-12
Result	Test passed

Polarization and coding

Specification	IEC 60512-13-5:2006-02
Result	Test passed

Contact holder in insert

Specification	IEC 60512-15-1:2008-05

Contact holder in insert Requirements >20 N	Test passed

Insertion and withdrawal forces

Result	Test passed
No. of cycles	10
Insertion strength per pos. approx.	5 N
Withdraw strength per pos. approx.	3 N

Electrical tests

Thermal test | Test group C

Specification	IEC 60512-5-1:2002-02
Tested number of positions	8

Insulation resistance

Specification	IEC 60512-3-1:2002-02
Insulation resistance, neighboring positions	> 5 MΩ

Air clearances and creepage distances |

Specification	IEC 60664-1:2007-04
Insulating material group	I
Comparative tracking index (IEC 60112)	CTI 600
Rated insulation voltage (III/3)	125 V
Rated surge voltage (III/3)	2.5 kV
minimum clearance value - non-homogenous field (III/3)	1.5 mm
minimum creepage distance (III/3)	1.9 mm
Rated insulation voltage (III/2)	160 V
Rated surge voltage (III/2)	2.5 kV
minimum clearance value - non-homogenous field (III/2)	1.5 mm
minimum creepage distance (III/2)	1.5 mm
Rated insulation voltage (II/2)	250 V
Rated surge voltage (II/2)	2.5 kV
minimum clearance value - non-homogenous field (II/2)	1.5 mm
minimum creepage distance (II/2)	1.6 mm

Environmental and real-life conditions

Vibration test

Specification	IEC 60068-2-6:2007-12
Frequency	10 - 150 - 10 Hz
Sweep speed	1 octave/min
Amplitude	0.35 mm (10 Hz ... 60.1 Hz)
Acceleration	5g (60.1 Hz ... 150 Hz)
Test duration per axis	2.5 h

Durability test

Specification	IEC 60512-9-1:2010-03
Impulse withstand voltage at sea level	2.95 kV
Contact resistance R_1	2.4 mΩ
Contact resistance R_2	2.3 mΩ
Insertion/withdrawal cycles	10
Insulation resistance, neighboring positions	> 5 MΩ

Climatic test

Specification	ISO 6988:1985-02
Corrosive stress	0.2 dm^3 SO_2 on 300 dm^3/40 °C/1 cycle
Thermal stress	100 °C/168 h
Power-frequency withstand voltage	1.39 kV

Ambient conditions

Ambient temperature (operation)	-40 °C ... 100 °C (dependent on the derating curve)
Ambient temperature (storage/transport)	-40 °C ... 70 °C
Relative humidity (storage/transport)	30 % ... 70 %
Ambient temperature (assembly)	-5 °C ... 100 °C

Packaging specifications

Dimensional drawing	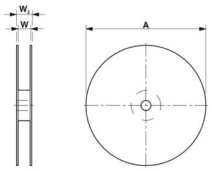
Type of packaging	44 mm wide tape
[W] tape width	44 mm
[W2] coil overall dimension	50.4 mm
[A] coil diameter	330 mm
Outer packaging type	Transparent-Bag
ESD level	(D) electrostatically conductive
Specification	DIN EN 61340-5-1 (VDE 0300-5-1): 2008-07

Drawings

Dimensional drawing

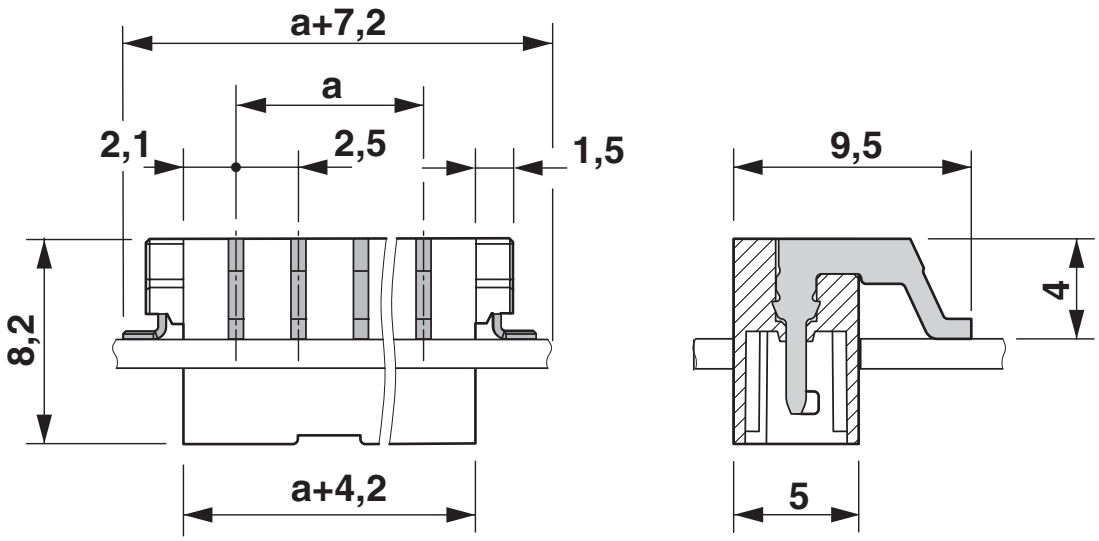

Drilling plan/solder pad geometry

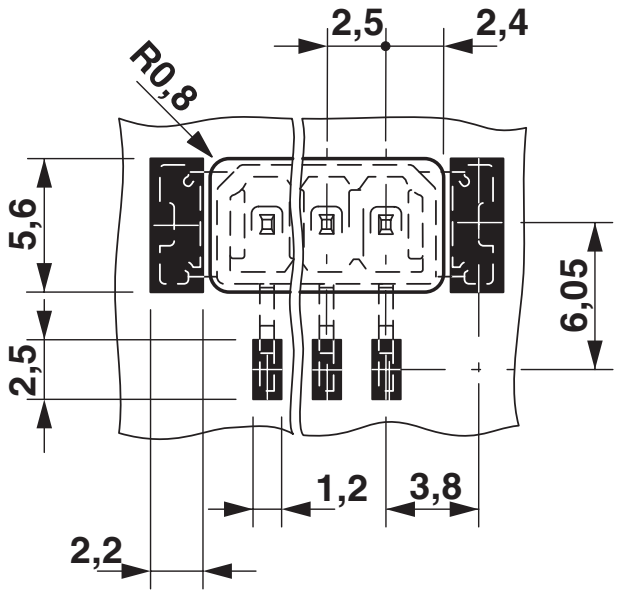

Diagram

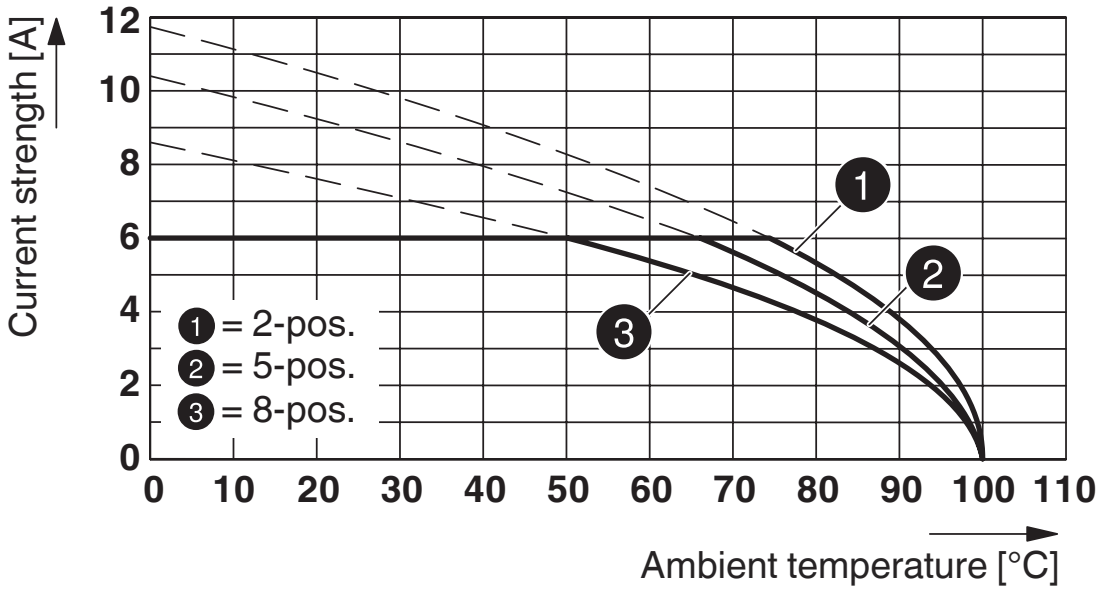

Type: PTSM 0,5/...-P-2,5 WH with PTSM 0,5/...-HTB-2,5-SMD WH R...

Approvals

To download certificates, visit the product detail page: https://www.phoenixcontact.com/us/products/1830168

UL Recognized
Approval ID: E118976-20130619

	Nominal voltage U_N	Nominal current I_N	Cross section AWG	Cross section mm^2
Use group B				
	150 V	5 A	-	-

cULus Recognized
Approval ID: E60425-20110108

	Nominal voltage U_N	Nominal current I_N	Cross section AWG	Cross section mm^2
Use group B				
	150 V	6 A	-	-

VDE Zeichengenehmigung
Approval ID: 40048497

	Nominal voltage U_N	Nominal current I_N	Cross section AWG	Cross section mm^2
	160 V	6 A	-	-

Classifications

ECLASS

ECLASS-11.0	27460201
ECLASS-12.0	27460201
ECLASS-13.0	27460201

ETIM

ETIM 9.0	EC002637

UNSPSC

UNSPSC 21.0	39121400

Environmental product compliance

EU RoHS

Fulfills EU RoHS substance requirements	Yes, No exemptions

China RoHS

Environment friendly use period (EFUP)	EFUP-E
	No hazardous substances above the limits

EU REACH SVHC

REACH candidate substance (CAS No.)	No substance above 0.1 wt%

Accessories

PTSM 0,5/ 6-HHI-2,5-THR WH R32 - PCB header

1815028

https://www.phoenixcontact.com/us/products/1815028

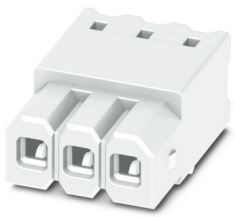

PCB headers, nominal cross section: 0.5 mm^2, color: signal white, nominal current: 6 A, rated voltage (III/2): 160 V, contact surface: Tin, contact connection type: Socket, number of potentials: 6, number of rows: 1, number of positions: 6, number of connections: 6, product range: PTSM 0,5/..-HHI-THR WH, pitch: 2.5 mm, mounting: THR soldering / wave soldering, pin layout: Linear pinning, solder pin [P]: 2.1 mm, number of solder pins per potential: 1, plug-in system: COMBICON PTSM, Pin connector pattern alignment: Standard, locking: without, mounting: without, type of packaging: 32 mm wide tape

PTSM 0,5/ 6-PL-2,5 WH - PCB connectors

1709463

https://www.phoenixcontact.com/us/products/1709463

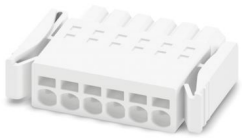

PCB connector, nominal cross section: 0.5 mm^2, color: white, nominal current: 6 A, rated voltage (III/2): 160 V, contact surface: Tin, contact connection type: Socket, number of potentials: 6, number of rows: 1, number of positions: 6, number of connections: 6, product range: PTSM 0,5/..-PL WH, pitch: 2.5 mm, connection method: Push-in spring connection, conductor/PCB connection direction: 0 °, plug-in system: COMBICON PTSM, locking: Snap-in locking, mounting: Self-locking flange, type of packaging: packed in cardboard

CAC-PTCM1015460/D - Cable

1084518

https://www.phoenixcontact.com/us/products/1084518



Assembled PCB connector / Connecting cable with 2 printed circuit board connectors, rated current: 6 A, cable length: Free input (0.1 ... 3.0 m), Head 1: 6-position , pitch: 2.5 mm , Crimp connection , Socket, Color: white, Cable type:Individual litz wire, PVC, 22 AWG, white, Head 2: 6-position, pitch: 2.5 mm , Crimp connection , Socket, Color: white, Cable type:Individual litz wire, PVC, 20 AWG, white, Individual litz wire, PVC, 22 AWG, white

CAC-PTCM1015460/1015246 - Assembled PCB connectors

1084536

https://www.phoenixcontact.com/us/products/1084536



Assembled PCB connector / Connecting cable with 2 printed circuit board connectors, rated current: 6 A, cable length: Free input (0.1 ... 3.0 m), Head 1: 6-position , pitch: 2.5 mm , Crimp connection , Socket, Color: white, Cable type:Individual litz wire, PVC, 22 AWG, white, Head 2: 6-position, pitch: 2.5 mm , Crimp connection , Pin, Color: white, Cable type:Individual litz wire, PVC, 20 AWG, white, Individual litz wire, PVC, 22 AWG, white

Phoenix Contact 2024 © - all rights reserved
https://www.phoenixcontact.com

Phoenix Contact USA
586 Fulling Mill Road
Middletown, PA 17057, United States
(+717) 944-1300
info@phoenixcon.com