Data sheet



LFP0400-N6NMC

LFP Inox

LEVEL SENSORS

SICK
Sensor Intelligence.



Illustration may differ

Ordering information

Type	part no.
LFP0400-N6NMC	1093212

Other models and accessories ➜ www.sick.com/LFP_Inox

Detailed technical data

Features

Medium	Fluids
Measurement	Switch, Continuous
Design	Standard
Probe type	Rod probe in hygienic design
Probe length	400 mm
Process pressure	–1 bar ... 16 bar
Process temperature	–20 °C ... +150 °C
UL approval	✓
RoHS certificate	✓
IO-Link	✓
EHEDG approval	✓

Performance

Accuracy of sensor element	± 5 mm
Reproducibility	≤ 2 mm
Resolution	1 mm
Response time	< 400 ms [1]
Dielectricity constant	≥ 5 for rod probe ≥ 1.8 with coaxial tube
Conductivity	No limitation
Deactivated area at process connection	25 mm [2]
Deactivated area at end of probe	≥ 10 mm [3]

[1] Dependent on measuring mode (high speed < 400 ms, high accuracy < 2,800 ms).
[2] With parameterized container with water under reference conditions, otherwise 40 mm.
[3] With water under reference conditions.

MTTF	194.3 years (EN ISO 13849-1)
Display	✓

[1] Dependent on measuring mode (high speed < 400 ms, high accuracy < 2,800 ms).
[2] With parameterized container with water under reference conditions, otherwise 40 mm.
[3] With water under reference conditions.

Electronics

Communication interface	IO-Link
Supply voltage	12 V DC ... 30 V DC [1]
Power consumption	≤ 75 mA at 24 V DC without output load
Initialization time	≤ 2 s
Protection class	III
Connection type	M12 round connector x 1, 8-pin
Output signal	1 x PNP + 3 x PNP/NPN + 4 mA ... 20 mA / 0 V ... 10 V
Output load	4 mA ... 20 mA < 500 Ohm at Uv > 13,5 V, 4 mA ... 20 mA < 400 Ohm at Uv > 12 V, 0 V ... 10 V > 750 Ohm at Uv 14 ≥ V
Hysteresis	≥ 2 mm [2]
Output current	< 100 mA
Inductive load	< 1 H
Capacitive load	< 100 nF
Enclosure rating	IP67 / 69: EN 60529
Temperature drift	< 0.1 mm/K
Lower signal level	3.8 mA ... 4 mA, 0 V
Upper signal level	20 mA ... 20.5 mA, 10.5 V
EMC	EN 61326-2-3, 2014/30/EU

[1] All connections are polarity protected. All outputs are overload and short-circuit protected.
[2] Freely adjustable.

Mechanics

Wetted parts	316L (Ra ≤ 0,8 µm), PEEK
Process connection	¾" NPT
Housing material	303
Housing design	With viewing window made from PMMA (acrylic glass)
Max. probe load	≤ 6 Nm

Ambient data

Ambient operating temperature	–20 °C ... +60 °C
Ambient temperature, storage	–40 °C ... +80 °C
Outdoor use	Only with weather hood

Certificates

EU declaration of conformity	✓
UK declaration of conformity	✓
ACMA declaration of conformity	✓
Moroccan declaration of conformity	✓

China-RoHS	✓
FDA-Certificate	✓
cULus certificate	✓
IO-Link	✓
Food contact material manufacturer declaration	✓

Classifications

ECLASS 5.0	27200513
ECLASS 5.1.4	27200513
ECLASS 6.0	27200513
ECLASS 6.2	27200513
ECLASS 7.0	27200513
ECLASS 8.0	27200513
ECLASS 8.1	27200513
ECLASS 9.0	27200513
ECLASS 10.0	27200513
ECLASS 11.0	27200513
ECLASS 12.0	27200513
ETIM 5.0	EC001447
ETIM 6.0	EC001447
ETIM 7.0	EC001447
ETIM 8.0	EC001447
UNSPSC 16.0901	41113710

Dimensional drawing

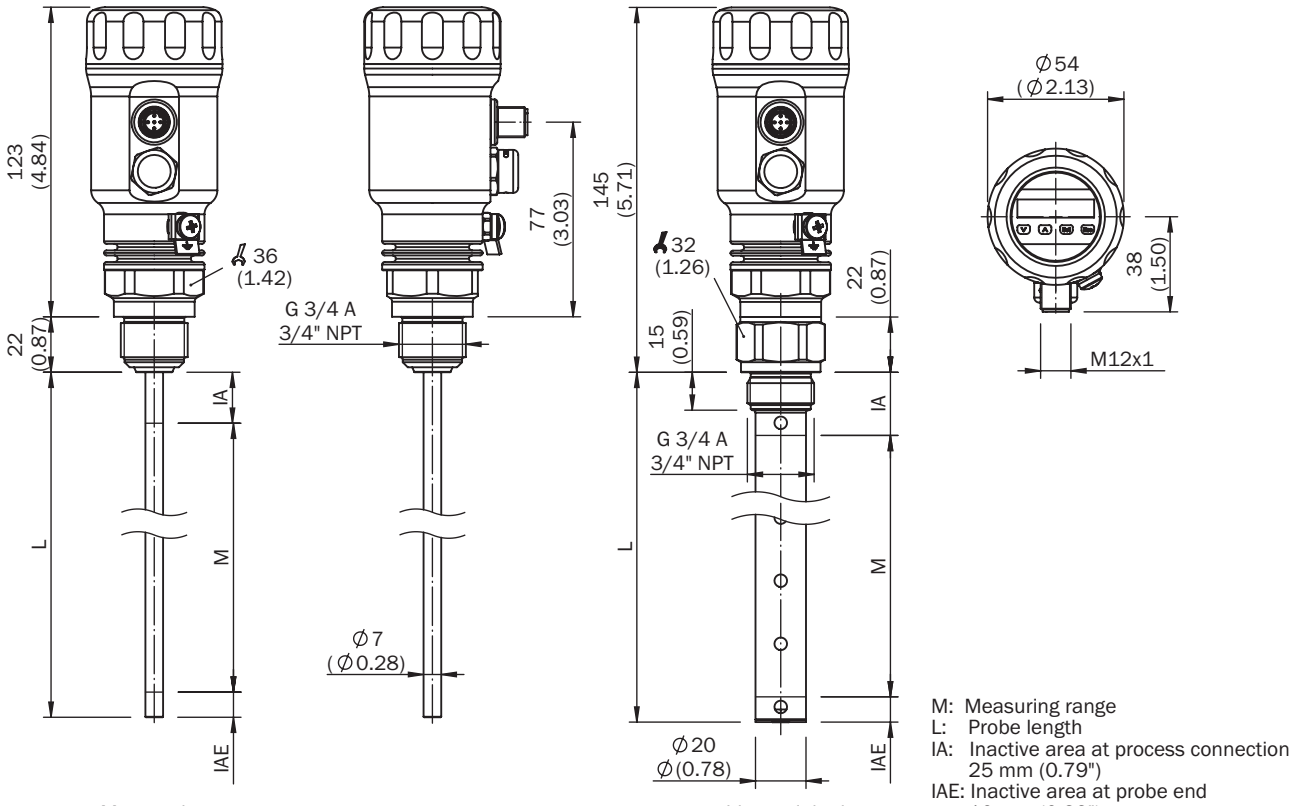

Monoprobe

with coaxial tube

M: Measuring range
L: Probe length
IA: Inactive area at process connection
25 mm (0.79")
IAE: Inactive area at probe end
10 mm (0.39")

Dimensions in mm (inch)

Connection type M12 round connector, 8-pin

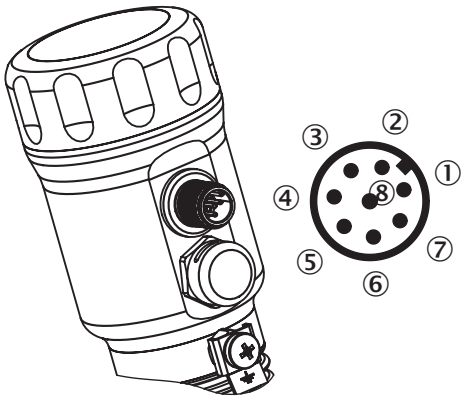

The wire colors for 8-pin cables are not uniform. Always note the pin assignment of the sensor.

① L^+: Supply voltage
② Q_2: Switching output 2, PNP/NPN
③ M: Ground, reference ground for current-/voltage output
④ C/Q_1: Switching output 1, PNP/IO-Link-communication
⑤ Q_3: Switching output 3, PNP/NPN
⑥ Q_4: Switching output 4, PNP/NPN
⑦ Q_A: Analog current-/voltage output
⑧ No function

Recommended accessories

Other models and accessories ➜ www.sick.com/LFP_Inox

	Brief description	Type	part no.
device protection and care			
	• **Description:** Weather protection cover for LFP Inox, material: 304	APR-WP-LFP001-0001	2069530
	• **Description:** Cover for LFP Inox with inspection window, material 1.4305 and PMMA	Cover with front screen	2067267
	• **Description:** Cover closed, material 1.4305	Cover closed	2067269
Mounting systems			
	• **Description:** Centering for bypass- and immersion tube installation with diameter 40 mm ... 100 mm • **Dimensions (W x H x L):** 100 mm x 5 mm x 100 mm • **Material:** PTFE • **Details:** PTFE • **Packing unit:** 1 piece • **Usable for:** LFP Inox	BEF-FL-BYRD40-LFP1	2059612
	• **Description:** Hygienic process connection adapter, Tri-Clamp 1" and 1 ½", including acceptance test certificate 3.1; Ra ≤ 0.4 µm, hygienic in accordance with EHEDG in combination with T-seals or Tri-Clamp seals from Combifit International B.V.	BEF-HA-TCLI10-LFP2	2126242
	• **Description:** Hygienic process connection adapter, Tri-Clamp 2"; including acceptance test certificate 3.1; Ra ≤ 0.4 µm, hygienic in accordance with EHEDG in combination with T-seals or Tri-Clamp seals from Combifit International B.V.	BEF-HA-TCLI20-LFP2	2126243
	• **Description:** Weld-in flange, hygienic, G 3/4" including acceptance test certificate 3.1, Ra ≤ 0.4 µm • **Material:** Stainless steel • **Details:** Stainless steel 1.4404	BEF-HA-SWFL54-LFP2	2122489

	Brief description	Type	part no.
connectors and cables			
	• **Connection type head A:** Female connector, M12, 5-pin, straight • **Connection type head B:** Flying leads • **Signal type:** Sensor/actuator cable • **Cable:** 2 m, 5-wire, PP • **Description:** Sensor/actuator cable, unshielded • **Connection systems:** Flying leads • **Note:** This product is generally resistant to chemical cleaning agents (see ECOLAB) and other chemical compounds such as H2O2 and CH2O2. Before permanent installation is carried out, the material's resistance to the cleaning agent being used must be checked., Resistant against lactic acid & hydrogen peroxide (H2O2) • **Application:** Hygienic and washdown zones, Drag chain operation	DOL-1205-G02MRN	6058494
	• **Connection type head A:** Female connector, M12, 5-pin, straight • **Connection type head B:** Flying leads • **Signal type:** Sensor/actuator cable • **Cable:** 5 m, 5-wire, PP • **Description:** Sensor/actuator cable, unshielded • **Connection systems:** Flying leads • **Note:** This product is generally resistant to chemical cleaning agents (see ECOLAB) and other chemical compounds such as H2O2 and CH2O2. Before permanent installation is carried out, the material's resistance to the cleaning agent being used must be checked., Resistant against lactic acid & hydrogen peroxide (H2O2) • **Application:** Hygienic and washdown zones, Drag chain operation	DOL-1205-G05MRN	6058495
	• **Connection type head A:** Female connector, M12, 5-pin, straight • **Connection type head B:** Flying leads • **Signal type:** Sensor/actuator cable • **Cable:** 10 m, 5-wire, PP • **Description:** Sensor/actuator cable, unshielded • **Connection systems:** Flying leads • **Note:** This product is generally resistant to chemical cleaning agents (see ECOLAB) and other chemical compounds such as H2O2 and CH2O2. Before permanent installation is carried out, the material's resistance to the cleaning agent being used must be checked., Resistant against lactic acid & hydrogen peroxide (H2O2) • **Application:** Hygienic and washdown zones, Drag chain operation	DOL-1205-G10MRN	6058496
	• **Connection type head A:** Female connector, M12, 5-pin, straight • **Connection type head B:** Flying leads • **Signal type:** Sensor/actuator cable • **Cable:** 25 m, 5-wire, PVC • **Description:** Sensor/actuator cable, unshielded • **Connection systems:** Flying leads • **Note:** This product is generally resistant to chemical cleaning agents (see ECOLAB). Please do not use cleaning agents of any other Kind., Not resistant against lactic acid & hydrogen peroxide (H2O2) • **Application:** Hygienic and washdown zones	DOL-1205-G25MNI	6052628
	• **Connection type head A:** Female connector, M12, 5-pin, straight • **Connection type head B:** Flying leads • **Signal type:** Sensor/actuator cable • **Cable:** 25 m, 5-wire, PP • **Description:** Sensor/actuator cable, unshielded • **Connection systems:** Flying leads • **Note:** This product is generally resistant to chemical cleaning agents (see ECOLAB) and other chemical compounds such as H2O2 and CH2O2. Before permanent installation is carried out, the material's resistance to the cleaning agent being used must be checked., Resistant against lactic acid & hydrogen peroxide (H2O2) • **Application:** Hygienic and washdown zones, Drag chain operation	DOL-1205-G25MRN	6058497
	• **Connection type head A:** Female connector, M12, 5-pin, straight • **Connection type head B:** Flying leads • **Signal type:** Sensor/actuator cable • **Cable:** 2 m, 5-wire, PVC • **Description:** Sensor/actuator cable, unshielded • **Connection systems:** Flying leads • **Note:** This product is generally resistant to chemical cleaning agents (see ECOLAB). Please do not use cleaning agents of any other Kind., Not resistant against lactic acid & hydrogen peroxide (H2O2) • **Application:** Hygienic and washdown zones	DOL-1205-G02MNI	6052625
	• **Connection type head A:** Female connector, M12, 5-pin, straight • **Connection type head B:** Flying leads • **Signal type:** Sensor/actuator cable • **Cable:** 5 m, 5-wire, PVC • **Description:** Sensor/actuator cable, unshielded • **Connection systems:** Flying leads	DOL-1205-G05MNI	6052626

	Brief description	Type	part no.
	• **Note:** This product is generally resistant to chemical cleaning agents (see ECOLAB). Please do not use cleaning agents of any other Kind., Not resistant against lactic acid & hydrogen peroxide (H2O2) • **Application:** Hygienic and washdown zones		
	• **Connection type head A:** Female connector, M12, 5-pin, straight • **Connection type head B:** Flying leads • **Signal type:** Sensor/actuator cable • **Cable:** 10 m, 5-wire, PVC • **Description:** Sensor/actuator cable, unshielded • **Connection systems:** Flying leads • **Note:** This product is generally resistant to chemical cleaning agents (see ECOLAB). Please do not use cleaning agents of any other Kind., Not resistant against lactic acid & hydrogen peroxide (H2O2) • **Application:** Hygienic and washdown zones	DOL-1205-G10MNI	6052627
	• **Connection type head A:** Female connector, M12, 5-pin, straight • **Connection type head B:** Flying leads • **Signal type:** Sensor/actuator cable • **Cable:** 20 m, 5-wire, PP • **Description:** Sensor/actuator cable, unshielded • **Connection systems:** Flying leads • **Note:** This product is generally resistant to chemical cleaning agents (see ECOLAB) and other chemical compounds such as H2O2 and CH2O2. Before permanent installation is carried out, the material's resistance to the cleaning agent being used must be checked., Resistant against lactic acid & hydrogen peroxide (H2O2) • **Application:** Hygienic and washdown zones, Drag chain operation	YF2AP5-200PA3XLEAX	2146868
	• **Connection type head A:** Female connector, M12, 5-pin, straight • **Connection type head B:** Flying leads • **Signal type:** Sensor/actuator cable • **Cable:** 40 m, 5-wire, PP • **Description:** Sensor/actuator cable, unshielded • **Connection systems:** Flying leads • **Note:** This product is generally resistant to chemical cleaning agents (see ECOLAB) and other chemical compounds such as H2O2 and CH2O2. Before permanent installation is carried out, the material's resistance to the cleaning agent being used must be checked., Resistant against lactic acid & hydrogen peroxide (H2O2) • **Application:** Hygienic and washdown zones, Drag chain operation	YF2AP5-400PA3XLEAX	2146869

SICK AT A GLANCE

SICK is one of the leading manufacturers of intelligent sensors and sensor solutions for industrial applications. A unique range of products and services creates the perfect basis for controlling processes securely and efficiently, protecting individuals from accidents and preventing damage to the environment.

We have extensive experience in a wide range of industries and understand their processes and requirements. With intelligent sensors, we can deliver exactly what our customers need. In application centers in Europe, Asia and North America, system solutions are tested and optimized in accordance with customer specifications. All this makes us a reliable supplier and development partner.

Comprehensive services complete our offering: SICK LifeTime Services provide support throughout the machine life cycle and ensure safety and productivity.

For us, that is “Sensor Intelligence.”

WORLDWIDE PRESENCE:

Contacts and other locations –www.sick.com