# PLC-RPT- 72UC/21/RW - Relay module

2900319

https://www.phoenixcontact.com/us/products/2900319

Please be informed that the data shown in this PDF document is generated from our online catalog. Please find the complete data in the user documentation. Our general terms of use for downloads are valid.



PLC-INTERFACE for railway applications, consisting of basic terminal block with Push-in connection and plug-in miniature relay with power contact, range: 0.7 x $U_N$ to 1.25 x $U_N$, temperature class TX: -40°C to +70°C, 1 changeover contact, input voltage 72 V DC

## Your advantages

- Optimum relay operation thanks to wide-range electronics
- Safe isolation between coil and contact side
- Certified in accordance with EN 50155
- Vibration and shock resistance in accordance with EN 50155
- Temperature range: -40 °C ... + 70 °C (short-term 85 °C)
- Input voltage range of 0.7 to 1.25 x UN (1.4 x UN briefly)

## Commercial data

| | |
|---|---|
| Item number | 2900319 |
| Packing unit | 10 pc |
| Minimum order quantity | 10 pc |
| Note | Made to order (non-returnable) |
| Sales key | C461 |
| Product key | DK62AL |
| GTIN | 4046356507417 |
| Weight per piece (including packing) | 33.37 g |
| Weight per piece (excluding packing) | 33.37 g |
| Customs tariff number | 85364900 |
| Country of origin | DE |

# Technical data

## Product properties

| | |
|---|---|
| Product type | Relay Module |
| Product family | PLC-INTERFACE |
| Application | Railway applications |
| Installation location | Attached to the vehicle body |
| Operating mode | 100% operating factor |
| Mechanical service life | approx. 2x $10^7$ cycles |

### Insulation characteristics

| | |
|---|---|
| Overvoltage category | III |
| Pollution degree | 2 |

### Data management status

| | |
|---|---|
| Date of last data management | 03.07.2025 |

## Electrical properties

| | |
|---|---|
| Maximum power dissipation for nominal condition | 0.22 W |
| Test voltage (Winding/contact) | 4 $kV_{rms}$ (50 Hz, 1 min., winding/contact) |
| Rated insulation voltage | 250 V AC |
| Rated surge voltage | 6 kV |

## Input data

### Coil side

| | |
|---|---|
| Nominal input voltage $U_N$ | 72 V DC |
| Input voltage range | 50.4 V DC ... 90 V DC |
| Nominal voltage (plugged-in electromechanical relay) | 48 V DC |
| Drive and function | monostable |
| Drive (polarity) | polarized |
| Typical input current at $U_N$ | 3 mA |
| Typical response time | 4 ms |
| Typical release time | 4 ms |
| Protective circuit | Surge protection; Freewheeling diode |
| | RCZ filter |
| | Wide-range electronics |
| Operating voltage display | Yellow LED |

## Output data

### Switching

| | |
|---|---|
| Contact switching type | 1 changeover contact |
| Type of switch contact | Single contact |
| Contact material | AgSnO |

| | |
|---|---|
| Maximum switching voltage | 250 V AC/DC (Separating plate PLC-ATP must be installed for voltages larger than 250 V (L1, L2, L3) between identical terminal blocks in adjacent modules.) |
| Minimum switching voltage | 5 V (100 mA) |
| Limiting continuous current | 6 A |
| Maximum inrush current | 10 A (4 s) |
| Min. switching current | 10 mA (12 V) |
| Short-circuit current | 200 A (conditional short-circuit current) |
| Interrupting rating (ohmic load) max. | 140 W (at 24 V DC) |
| | 20 W (at 48 V DC) |
| | 18 W (at 60 V DC) |
| | 23 W (at 110 V DC) |
| | 40 W (at 220 V DC) |
| | 1500 VA (for 250 V AC) |
| Output fuse | 4 A gL/gG NEOZED |
| Switching capacity | 1 A (24 V (DC13)) |
| | 0.2 A (110 V (DC13)) |
| | 0.1 A (220 V (DC13)) |
| | 3 A (24 V (AC15)) |
| | 3 A (120 V (AC15)) |
| | 3 A (230 V (AC 15)) |

## Connection data

| | |
|---|---|
| Connection method | Push-in connection |
| Stripping length | 10 mm |
| Conductor cross-section rigid | 0.14 mm² ... 2.5 mm² |
| Conductor cross-section flexible | 0.14 mm² ... 2.5 mm² |
| | 0.2 mm² ... 2.5 mm² (Single ferrule) |
| | 2x 0.5 mm² ... 1 mm² (TWIN ferrule) |
| Conductor cross-section AWG | 26 ... 14 |

## Dimensions

| | |
|---|---|
| Width | 6.2 mm |
| Height | 80 mm |
| Depth | 94 mm |

## Material specifications

| | |
|---|---|
| Color | gray (RAL 7042) |
| Flammability rating according to UL 94 (Housing) | V0 (Housing) |

## Environmental and real-life conditions

Ambient conditions

| | |
|---|---|
| Degree of protection (Relay) | RT III (Relay) |
| Degree of protection (Relay base) | IP20 (Relay base) |

| | |
|---|---|
| Ambient temperature (operation) | -40 °C ... 70 °C (Temperature class TX) |
| Ambient temperature (storage/transport) | -40 °C ... 85 °C |

## Approvals

CE

| | |
|---|---|
| Certificate | CE-compliant |

UKCA

| | |
|---|---|
| Certificate | UKCA-compliant |

Shipbuilding approval

| | |
|---|---|
| Certificate | TAE0000196 |

Corrosive gas test

| | |
|---|---|
| Identification | ISA-S71.04. G3 Harsh Group |
| | EN 60068-2-60 |

Shipbuilding data

| | |
|---|---|
| Temperature | D |
| Humidity | A |
| Vibration | B/C |
| EMC | B |
| Enclosure | Required protection according to the Rules shall be provided upon installation on board |

## EMC data

| | |
|---|---|
| Electromagnetic compatibility | Conformance with EMC directive |
| Low Voltage Directive | Conformance with Low Voltage Directive |

## Standards and regulations

| | |
|---|---|
| Standards/regulations | IEC 60947-5-1 |
| | EN 50155 (VDE 0115 part 200) |
| | EN 61373 |
| | EN 50121 |

## Mounting

| | |
|---|---|
| Mounting type | DIN rail mounting |
| Assembly note | in rows with zero spacing |
| Mounting position | any |

## Drawings

Diagram

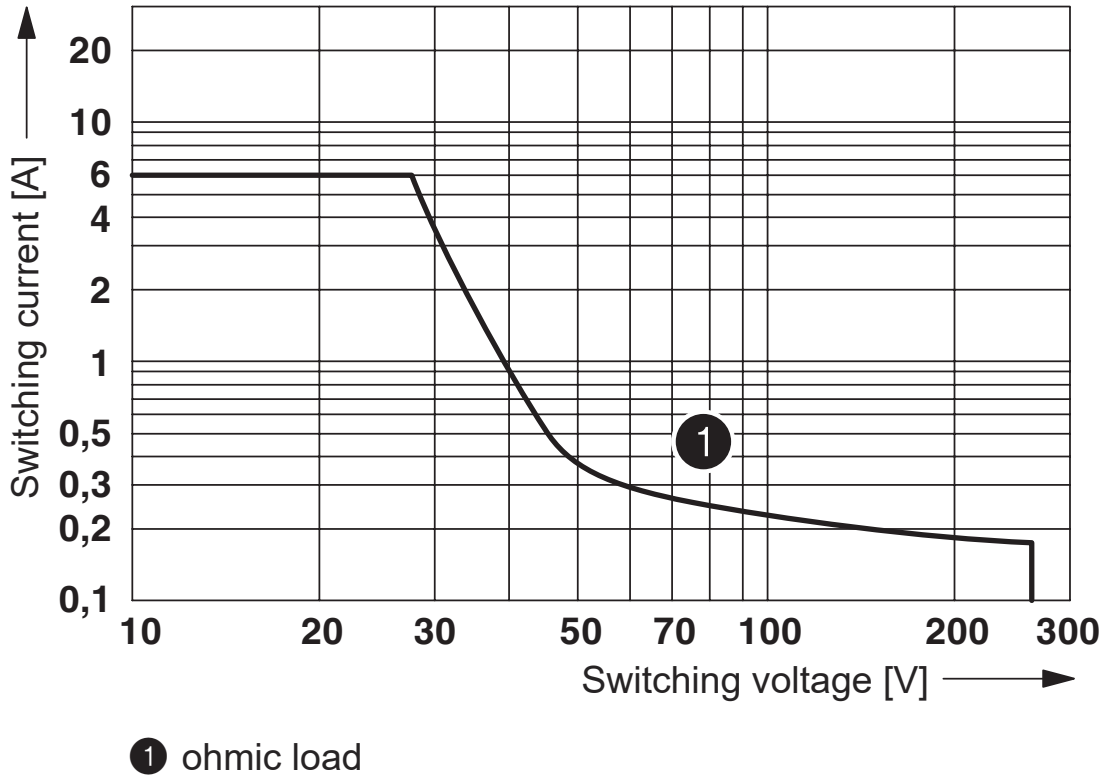


1 ohmic load

DC interrupting rating

Diagram

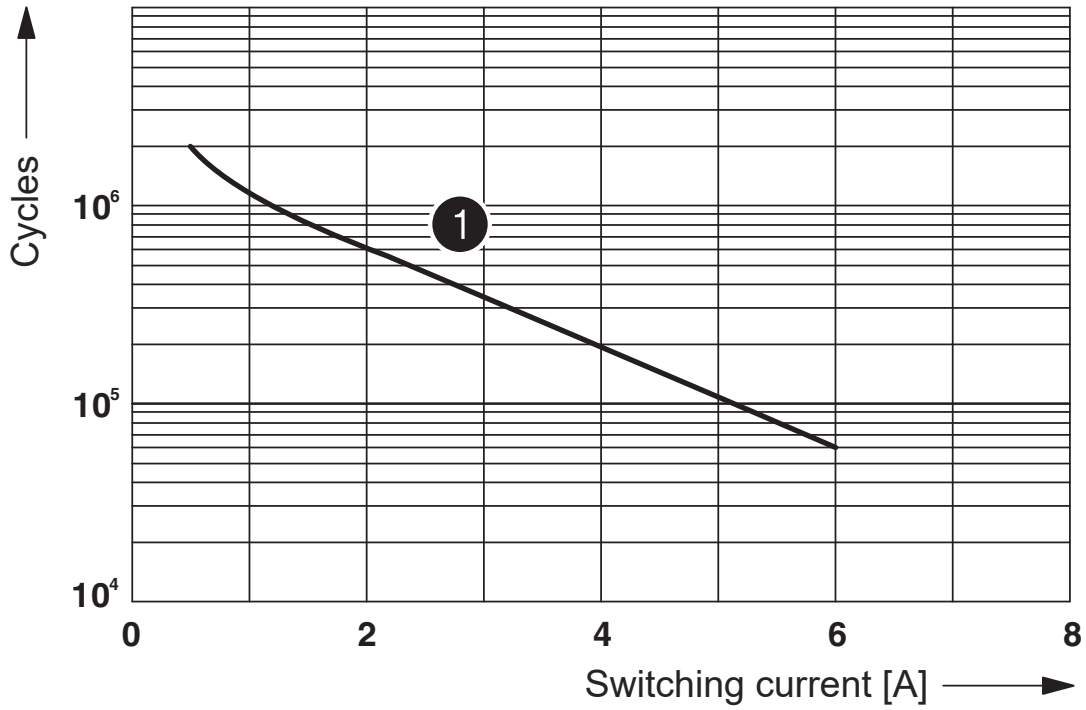


1 250 V AC, ohmic load

Electrical service life

Diagram

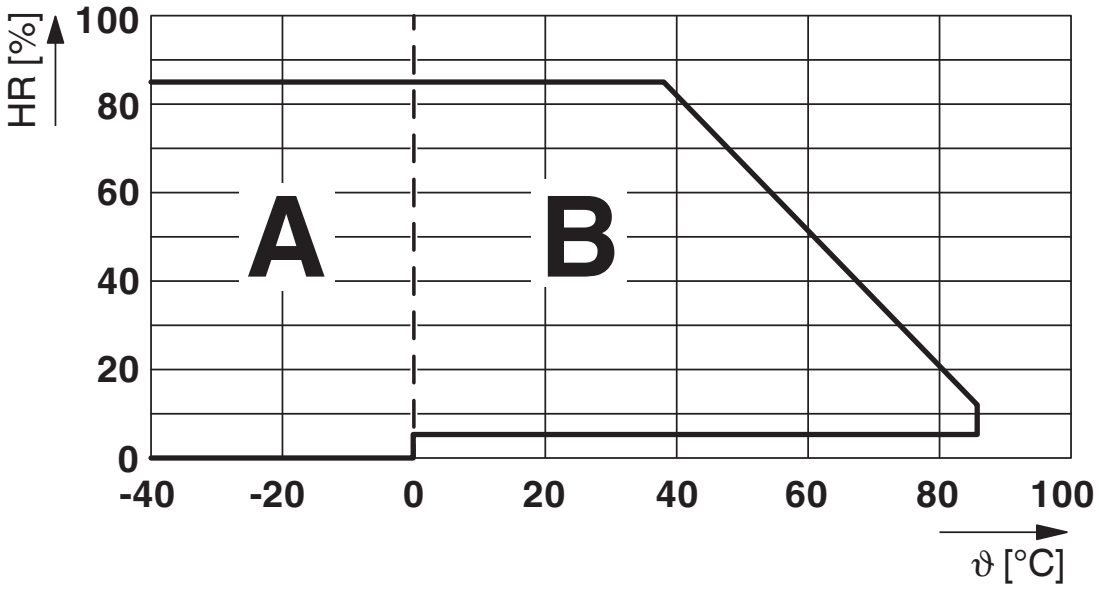


Permissible humidity for operation and storage.
The maximum permissible ambient temperature as specified in the data sheet must be observed.

Area A: Ice buildup at ambient temperatures ≤ 0°C must be prevented
Area B: Condensation at ambient temperatures > 0°C must be prevented

On 30 full days that are naturally distributed across an entire year, a humidity level of 95% is permissible at an ambient temperature ≤ 25°C.

Circuit diagram

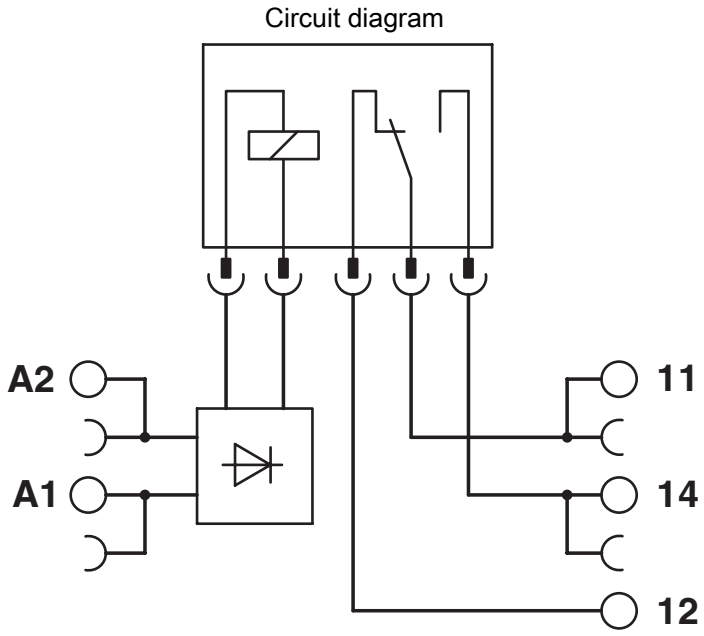

## Approvals

To download certificates, visit the product detail page: https://www.phoenixcontact.com/us/products/2900319

**EAC**
Approval ID: RU*C-DE.*08.B.00010

**DNV GL**
Approval ID: TAE0000196

**cULus Listed**
Approval ID: E140324

**cUL Recognized**
Approval ID: E238705

**UL Recognized**
Approval ID: E238705

**UL Listed**
Approval ID: FILE E 172140

**cUL Listed**
Approval ID: FILE E 172140

## Classifications

### ECLASS

| | |
|---|---|
| ECLASS-13.0 | 27371601 |
| ECLASS-15.0 | 27371601 |

### ETIM

| | |
|---|---|
| ETIM 9.0 | EC001437 |

### UNSPSC

| | |
|---|---|
| UNSPSC 21.0 | 39122300 |

## Environmental product compliance

EU RoHS

| | |
|---|---|
| Fulfills EU RoHS substance requirements | Yes |
| Exemption | 7(a), 7(c)-I |

China RoHS

| | |
|---|---|
| Environment friendly use period (EFUP) | EFUP-50 |
| | An article-related China RoHS declaration table can be found in the download area for the respective article under "Manufacturer declaration". For all articles with EFUP-E, no China RoHS declaration table issued and required. |

EU REACH SVHC

| | |
|---|---|
| REACH candidate substance (CAS No.) | Lead(CAS: 7439-92-1) |
| SCIP | ad81a586-7d0b-4b17-a59b-9d6a61f53720 |

Phoenix Contact 2025 © - all rights reserved
https://www.phoenixcontact.com

Phoenix Contact USA
586 Fulling Mill Road
Middletown, PA 17057, United States
(+717) 944-1300
info@phoenixcon.com