# E AB A 180X130X100 20PT - Junction box

3002001

https://www.phoenixcontact.com/pc/products/3002001

Please be informed that the data shown in this PDF document is generated from our online catalog. Please find the complete data in the user documentation. Our general terms of use for downloads are valid.



Junction box, With 20 terminal blocks, 2.5 $mm^2$ with push-in technology, material: ABS, gray, 180 mm x 130 mm x 100 mm, type of locking: Screw-on cover

## Your advantages

- Terminal box with cover and pre-assembled terminal strip
- Fast wiring without the need for additional components

## Commercial data

| | |
|---|---|
| Item number | 3002001 |
| Packing unit | 1 pc |
| Minimum order quantity | 1 pc |
| Product key | BH8231 |
| Catalog page | Page 647 (C-3-2019) |
| GTIN | 4055626083841 |
| Weight per piece (including packing) | 828 g |
| Weight per piece (excluding packing) | 765 g |
| Customs tariff number | 85371098 |
| Country of origin | IN |

## Technical data

### Product properties

| | |
|---|---|
| Product type | Terminal box |

Insulation characteristics

| | |
|---|---|
| Protection class | II |

### Dimensions

| | |
|---|---|
| Dimensional drawing | 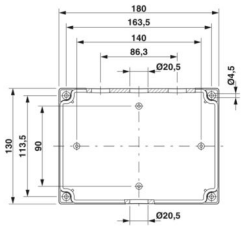  |
| Width | 180 mm |
| Height | 130 mm |
| Depth | 100 mm |

### Material specifications

| | |
|---|---|
| Color | gray |
| Material | ABS |
| Flammability rating according to UL 94 | UL-94 HB |
| Seal material | Silicon |
| Type of insulation | Full protective insulation |
| Components | halogen-free |

### Mechanical properties

General

| | |
|---|---|
| Type of locking (GRP) | Screw-on cover Phillips-Recess |

### Environmental and real-life conditions

Ambient conditions

| | |
|---|---|
| Ambient temperature (operation) | -25 °C ... 60 °C |

### Mounting

| | |
|---|---|
| Assembly instructions | Screw connection in housing base |

## Drawings

Dimensional drawing

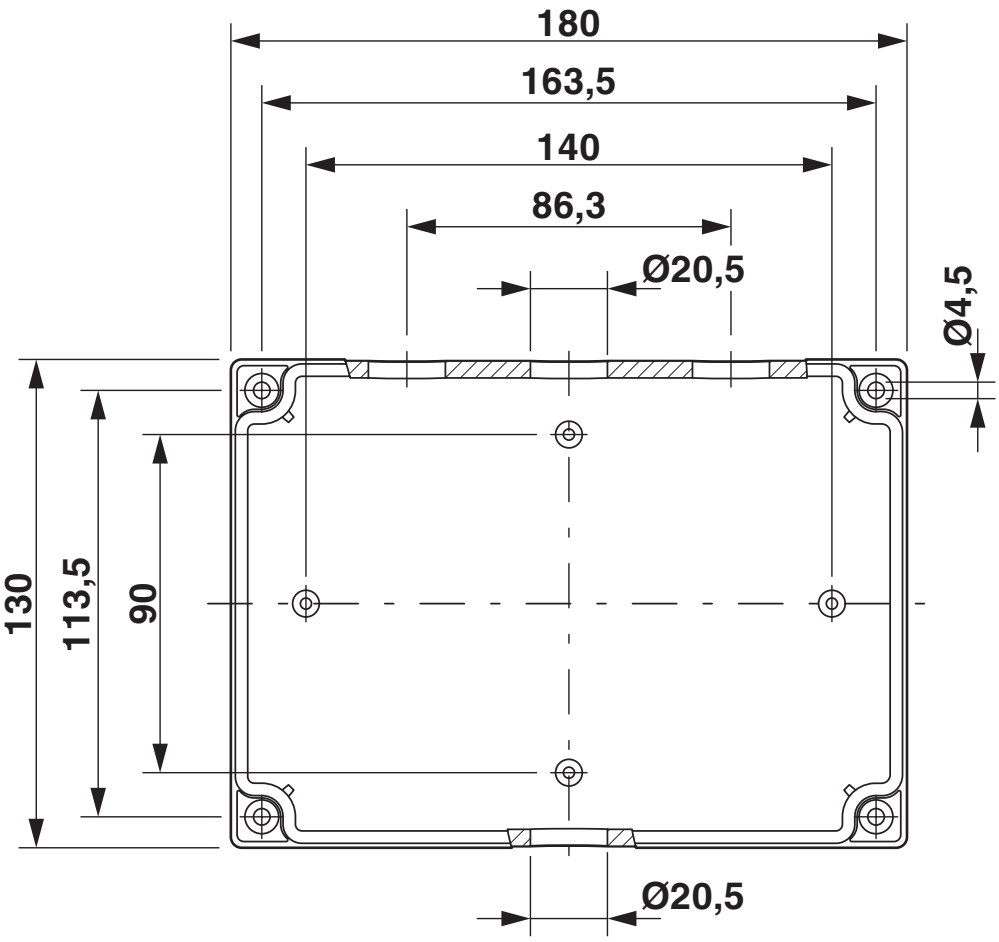

## Approvals

To download certificates, visit the product detail page: https://www.phoenixcontact.com/pc/products/3002001

EAC
Approval ID: RU C-DE.A*30.B.01742

EAC
Approval ID: RU C-DE.BL08.B.00582

## Classifications

### ECLASS

| | |
|---|---|
| ECLASS-11.0 | 27180101 |
| ECLASS-12.0 | 27180101 |
| ECLASS-13.0 | 27180101 |

### ETIM

| | |
|---|---|
| ETIM 8.0 | EC000261 |

### UNSPSC

| | |
|---|---|
| UNSPSC 21.0 | 31261500 |


Phoenix Contact 2024 © - all rights reserved
https://www.phoenixcontact.com



PHOENIX CONTACT GmbH & Co. KG
Flachsmarktstraße 8
D-32825 Blomberg
+49 (0) 5235-3 00
info@phoenixcontact.com