521204-6 ✔ ACTIVE

RAST | RAST 5 IDC Connectors

TE Internal #: 521204-6

Housing, Receptacle, Cable-to-Board, 2 Position, .197 in [5 mm] Centerline, Crimp, 1 Row, Blue, Mating Retention, Wire & Cable, RAST 5 IDC Connectors

View on TE.com >

Connectors > PCB Connectors > Wire-to-Board Connectors > Wire-to-Board Connector Assemblies & Housings

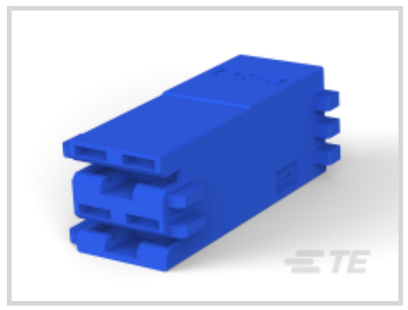
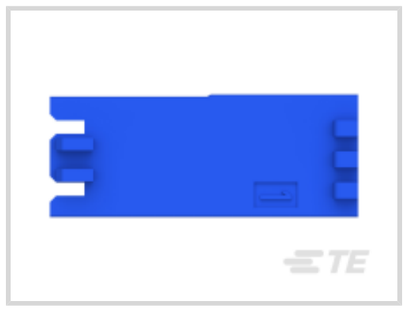


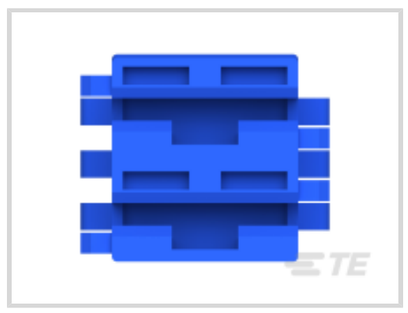

Connector Product Type: **Housing**

Connector & Housing Type: **Receptacle**

Connector System: **Cable-to-Board**

Number of Positions: **2**

Centerline (Pitch): **5 mm [.197 in]**

Features

Product Type Features

Connector Product Type	Housing
Connector & Housing Type	Receptacle
Connector System	Cable-to-Board
Sealable	No
Connector & Contact Terminates To	Wire & Cable

Configuration Features

Keying & Polarized Position Locations	1C, 2D
Number of Positions	2
Number of Rows	1

Body Features

Primary Product Color	Blue

Contact Features

Contact Type	Socket

Termination Features

Termination Method to Wire & Cable	Crimp

Mechanical Attachment

Strain Relief	Without
Panel Mount Feature	Without
PCB Mount Retention	Without
Mating Retention Type	Latch
Mating Retention	With
Connector Mounting Type	Cable Mount (Free-Hanging)

Housing Features

Housing Entry Configuration	Both Ends Closed
Housing Material	Nylon 66/6
Centerline (Pitch)	5 mm[.197 in]

Dimensions

Connector Length	9.2 mm[.362 in]
Connector Height	12.2 mm[.48 in]
Row-to-Row Spacing	5 mm[.197 in]

Usage Conditions

Operating Temperature Range	-55 - 105 °C[-67 - 221 °F]

Operation/Application

Circuit Application	Power

Industry Standards

Glow Wire Rating	Standard Part - Not Glow Wire
UL Flammability Rating	UL 94V-0

Packaging Features

Packaging Quantity	1
Packaging Method	Package

Product Compliance

For compliance documentation, visit the product page on TE.com>

EU RoHS Directive 2011/65/EU	Compliant
EU ELV Directive 2000/53/EC	Compliant

China RoHS 2 Directive MIIT Order No 32, 2016	No Restricted Materials Above Threshold
EU REACH Regulation (EC) No. 1907/2006	Current ECHA Candidate List: JAN 2024 (240) Candidate List Declared Against: JAN 2024 (240) Does not contain REACH SVHC
Halogen Content	Low Halogen - Br, Cl, F, I < 900 ppm per homogenous material. Also BFR/CFR/PVC Free
Solder Process Capability	Not applicable for solder process capability

Product Compliance Disclaimer

This information is provided based on reasonable inquiry of our suppliers and represents our current actual knowledge based on the information they provided. This information is subject to change. The part numbers that TE has identified as EU RoHS compliant have a maximum concentration of 0.1% by weight in homogenous materials for lead, hexavalent chromium, mercury, PBB, PBDE, DBP, BBP, DEHP, DIBP, and 0.01% for cadmium, or qualify for an exemption to these limits as defined in the Annexes of Directive 2011/65/EU (RoHS2). Finished electrical and electronic equipment products will be CE marked as required by Directive 2011/65/EU. Components may not be CE marked. Additionally, the part numbers that TE has identified as EU ELV compliant have a maximum concentration of 0.1% by weight in homogenous materials for lead, hexavalent chromium, and mercury, and 0.01% for cadmium, or qualify for an exemption to these limits as defined in the Annexes of Directive 2000/53/EC (ELV). Regarding the REACH Regulation, the information TE provides on SVHC in articles for this part number is based on the latest European Chemicals Agency (ECHA) 'Guidance on requirements for substances in articles' posted at this URL: https://echa.europa.eu/guidance-documents/guidance-on-reach

Compatible Parts

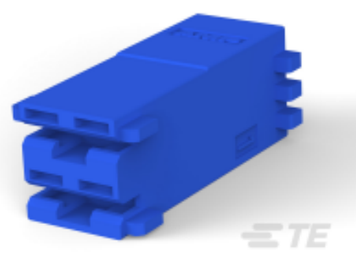

TE Part # 521204-1
POSI-LOK HSG.250-2 POS RAST5

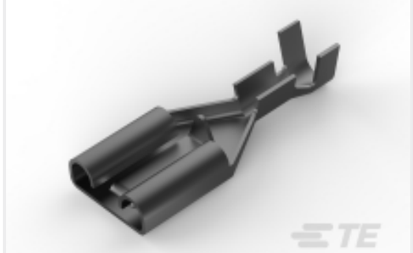

TE Part # 1217378-2
RCPT 250POS-LOC 22-18 0126TPBR



TE Part # 1-521204-1
RAST 5,HSG,2P,GWT POSILOCK MKI

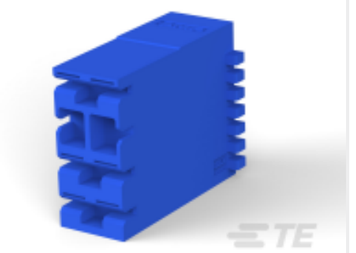

TE Part # 521295-1
HOUSING, POSITIVE LOCK, RAST



TE Part # 2292457-2
2P, RAST 5 HEADER, PL, SHROUDED

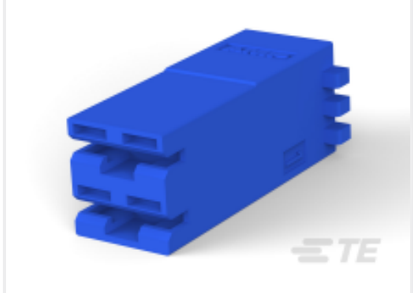

TE Part # 521204-5
HSG,POS LOC,MARKIII,250 SRS,2P

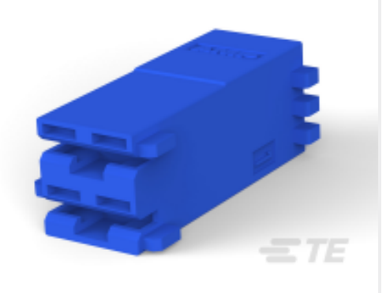

TE Part # 521204-2
HSG RCPT POSI MK 111 250 2POS



TE Part # 1969371-2
HSG, RAST 5 POSITIVE LOCK, 4P 2C



TE Part # 521204-3
HSG,2P,POS LOCK,MKIII,250 SERI

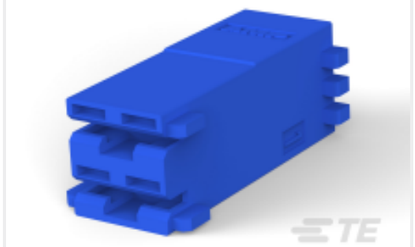

TE Part # 521204-7
RAST 5,HSG,2P,POSILOCK MKIII

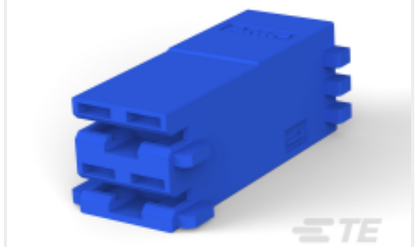

TE Part # 521204-8
RAST 5,HSG,2P,POSILOCK MKIII



TE Part # 521295-2
HSG,P LOCK,MKIII,250 SER,4P/3C

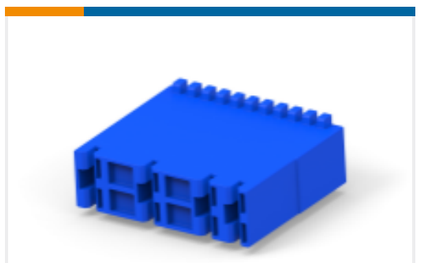

TE Part # 521435-1
HSG,POS-LOK,MARK3.250SRS,6P/4C



TE Part # 2390868-2
2P, RAST 5 HEADER, PL, SHROUDED



TE Part # 2390869-2
2P RAST 5 SHROUDED HEADER OPP PL



TE Part # 1-521204-0
POSI-LOK HSG 250 RAST5 spec



TE Part # 1969429-2
HOUSING, POSITIVE-LOCK MK III, RAST5, 2P



TE Part # 1969429-3
HOUSING, POSITIVE-LOCK MK III, RAST5, 2P



TE Part # 1969429-4
HOUSING, POSITIVE-LOCK MK III, RAST5, 2P



TE Part # 521204-4
HSG,2P,POS LOCK,MKIII,250 SERI

Also in the Series | RAST 5 IDC Connectors

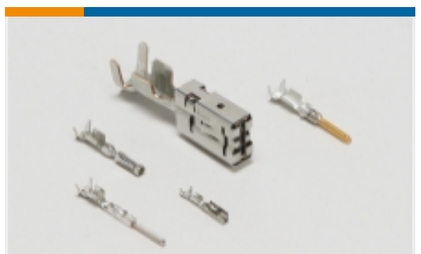

Automotive Terminals(8)



Connector Contacts(14)



Crimp Terminal Housings(39)



Insertion & Extraction Tools(1)

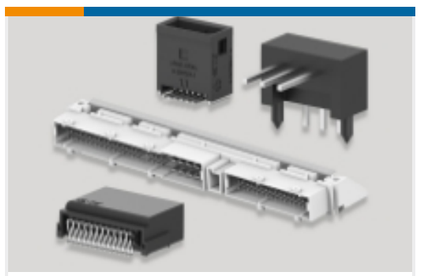

PCB Headers & Receptacles(417)



Rectangular Connector Housings(1)

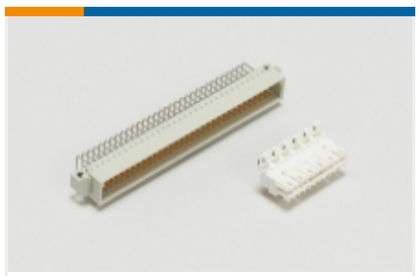

Standard Edge Connectors(33)

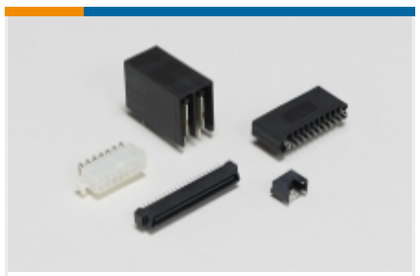

Standard Rectangular Connectors(63)



Wire-to-Board Connector Assemblies & Housings(213)

Customers Also Bought



TE Part # 1376391-1
STD Temp Power Key Plug



TE Part # 1376396-1
Power Key TPA

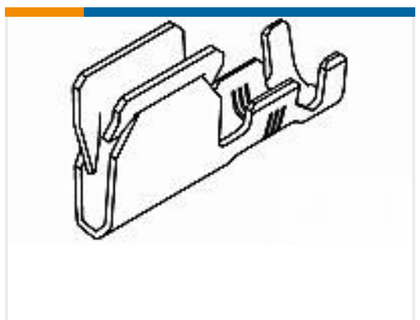

TE Part # 63895-1
GROUND CLIP 14-18AWG ST



TE Part # 1897058-1
CONNECTOR .125/.250 SERIES

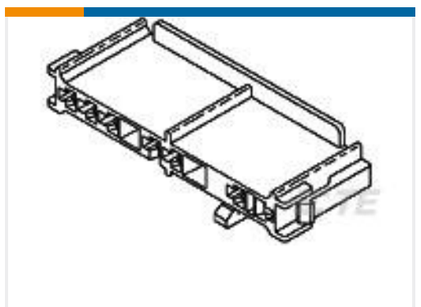

TE Part # 521085-1
DRYER .250 HOUSING NYLON 6/6

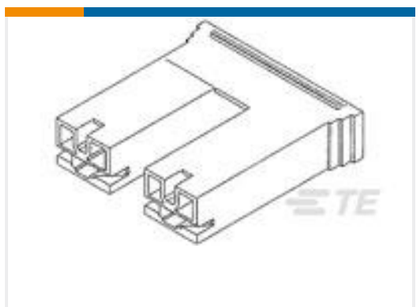

TE Part # 520935-1
PLMKII&FASTON 250 REC HSG 2P NAT



TE Part # 3-647449-1
SL156 RCPT,SPCL LUBE, LF

Documents

Product Drawings

RAST 5,HSG,2P,POSILOCK MKIII

English

CAD Files

3D PDF

3D

Customer View Model

ENG_CVM_CVM_521204-6_AB.2d_dxf.zip

English

Customer View Model

ENG_CVM_CVM_521204-6_AB.3d_igs.zip

English

Customer View Model

ENG_CVM_CVM_521204-6_AB.3d_stp.zip

English

By downloading the CAD file I accept and agree to the Terms and Conditionsof use.

Datasheets & Catalog Pages

RAST Connector System Catalog

English

Agency Approvals

UL Report

English