212856
LAT52-200IU-B5
Laser distance sensors

- IO-Link
- Precisely linearized object detection
- Large detection range
- 3 operating modes as an IO-Link parameter
- Laser class 1
- Red-light laser, with small laser spot
- Easy to operate
- Robust metal housing



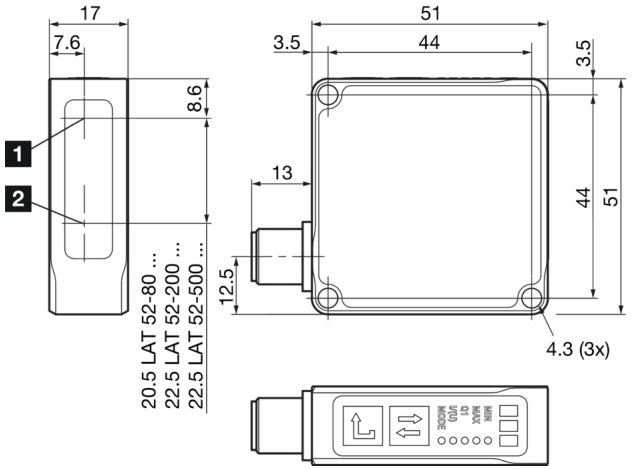

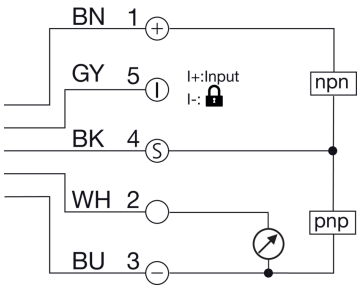

1) Light aperture
2) Receiver

BK: black
BN: brown
BU: blue
GY: grey
WH: white

Function

Technical data (typ.)	+20°C, 24 V DC
Service voltage	18 … 30 V DC (Supply Class 2)
No-load current (max.)	60 mA
Insulation voltage endurance	500 V
Housing dimensions	51 x 51 x 17 mm
Housing length	51 mm
Housing height	51 mm
Housing width	17 mm
Housing material	Die-cast zinc (Black, powder-coated)
Material window / optics	Plastic
Weight	102 g
Protection class	III, operation on protective low voltage
Approvals	UL
Design	Cuboid design
Operation modes	Standard operating modes: General applications, Speed: Quick measurement (measuring rate 1,200 Hz), Power: For dark objects
Switching output	Push-pull (1x), 100 mA, NO/NC
Voltage drop (max.)	2 V
Analog output	0 … 10 V, 4 … 20 mA
Interface	■ IO-Link V1.1, COM2 ■ Smart Sensor Profile

212856
LAT52-200IU-B5
Laser distance sensors

Technical data (typ.)	+20°C, 24 V DC
Light source	Laser (Clocked)
Laser class	CLASS 1 LASER PRODUCT, (IEC 60825-1:2014 / EN 60825-1:2014)
Color	Red
Wavelength	650 nm (Pp < 0.65 mW t = 4 µs)
Light spot size	Ø 1.0 mm
Measuring range	50 … 200 mm (6 to 90 % remission)
Measuring range 1	50 … 100 mm (6 to 90 % remission)
Measuring range 2	100 … 200 mm (6 to 90 % remission)
Resolution	0.02 … 0.05 mm (0.02 mm at 50 ... 100 mm, mode: standard, mean value 16), 0.05 mm with 100 to 200 mm, mode: Standard, median value 16))
Reproducibility	0.05 mm
Reproducibility	0.05 mm at 50 ... 100 mm, mode: standard, mean value 16, ± 0.1 mm at 50 ... 100 mm, Mode: Standard, median value 16
Linearity error	0.07 % (± 0.1 mm at 50 ... 100 mm, Mode: Standard, median value 16, ± 0.2 mm at 100 ... 200 mm, mode: standard, mean value 16)
Sensitivity adjustment	Keypad
Display	LED green - Status, yellow - Switching output, Red - Signal weak
Measuring frequency	750 Hz, (max. 1200 Hz in Speed sensor mode without filter)
Readiness delay (max.)	300 ms
Shock/vibration load	30 g, 10 … 55 Hz / 0.5 mm
Ambient temperature during operation	0 … +50 °C
Temperature drift	0.04 %/K
Protection type	IP 67
Connection	Connector, M12, 5-pin
Connection cable	VK … /5

More information / accessories	https://www.di-soric.com/212856

© di-soric . Right to change reserved