Optocoupler, Phototransistor Output, High Temperature

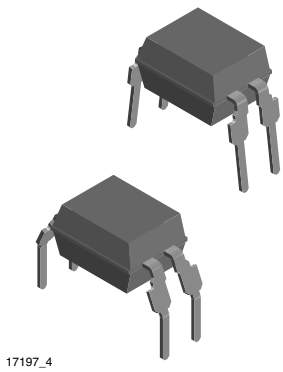

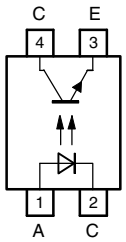

LINKS TO ADDITIONAL RESOURCES

Related Documents

DESCRIPTION

The TCET110. consists of a phototransistor optically coupled to a gallium arsenide infrared-emitting diode in a 4-lead plastic dual inline package.

AGENCY APPROVALS

- UL 1577
- cUL 1577
- DIN EN 60747-5-5 (VDE 0884-5)
- BSI: EN 62368-1:2014
- CQC GB4943.1-2011
- CQC GB8898-2011

FEATURES

- High common mode rejection
- Low temperature coefficient of CTR
- CTR offered in 7 groups
- Reinforced isolation provides circuit protection against electrical shock (safety class II)
- Isolation materials according to UL 94 V-0
- Pollution degree 2 (DIN / VDE 0110 / resp. IEC 60664)
- Climatic classification 55 / 100 / 21 (IEC 60068 part 1)
- Rated impulse voltage (transient overvoltage) $V_{IOTM} = 6\ kV_{peak}$
- Isolation test voltage (partial discharge test voltage) $V_{pd} = 1.6\ kV$
- Rated isolation voltage (RMS includes DC) $V_{IOWM} = 600\ V_{RMS}$
- Rated recurring peak voltage (repetitive) $V_{IORM} = 848\ V_{peak}$
- Creepage current resistance according to VDE 0303 / IEC 60112 comparative tracking index: CTI ≥ 175
- Material categorization: for definitions of compliance please see www.vishay.com/doc?99912

Pb-free
e3
RoHS COMPLIANT

APPLICATIONS

Circuits for safe protective separation against electrical shock according to safety class II (reinforced isolation):

- For application class I to IV at mains voltage ≤ 300 V
- For application class I to III at mains voltage ≤ 600 V according to DIN EN 60747-5-5 (VDE 0884), suitable for:
  - Switch-mode power supplies
  - Line receiver
  - Computer peripheral interface
  - Microprocessor system interface

ORDERING INFORMATION

T	C	E	T	1	1	0	#	#

PART NUMBER — LEAD FORM

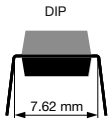

AGENCY CERTIFIED / PACKAGE	CTR (%)								
	10 mA								
UL, cUL, VDE, BSI, CQC	50 to 600	40 to 80	63 to 125	100 to 200	160 to 320	100 to 300	80 to 160	130 to 260	200 to 400
DIP-4	TCET1100	-	TCET1102	TCET1103	-	TCET1106	TCET1107	TCET1108	TCET1109
DIP-4, 400 mil	TCET1100G	TCET1101G	TCET1102G	TCET1103G	TCET1104G	TCET1106G	TCET1107G	TCET1108G	TCET1109G

Note

- G = lead form 10.16 mm; G is not marked on the body

For technical questions, contact: optocoupleranswers@vishay.com
THIS DOCUMENT IS SUBJECT TO CHANGE WITHOUT NOTICE. THE PRODUCTS DESCRIBED HEREIN AND THIS DOCUMENT ARE SUBJECT TO SPECIFIC DISCLAIMERS, SET FORTH AT www.vishay.com/doc?91000

ABSOLUTE MAXIMUM RATINGS (T_{amb} = 25 °C, unless otherwise specified)				
PARAMETER	**TEST CONDITION**	**SYMBOL**	**VALUE**	**UNIT**
INPUT				
Reverse voltage		V_R	6	V
Forward current		I_F	60	mA
Forward surge current	$t_p \leq 10$ µs	I_{FSM}	1.5	A
OUTPUT				
Collector emitter voltage		V_{CEO}	70	V
Emitter collector voltage		V_{ECO}	7	V
Collector current		I_C	50	mA
Collector peak current	$t_p/T = 0.5$, $t_p \leq 10$ ms	I_{CM}	100	mA
COUPLER				
Isolation test voltage (RMS)	t = 1 min	V_{ISO}	5000	V_{RMS}
Operating ambient temperature range		T_{amb}	-40 to +100	°C
Storage temperature range		T_{stg}	-55 to +125	°C
Soldering temperature [(1)]	2 mm from case, ≤ 10 s	T_{sld}	260	°C

Notes

- Stresses in excess of the absolute maximum ratings can cause permanent damage to the device. Functional operation of the device is not implied at these or any other conditions in excess of those given in the operational sections of this document. Exposure to absolute maximum ratings for extended periods of the time can adversely affect reliability

(1) Refer to wave profile for soldering conditions for through hole devices

THERMAL CHARACTERISTICS			
PARAMETER	**SYMBOL**	**VALUE**	**UNIT**
LED power dissipation	P_{diss}	100	mW
Output power dissipation	P_{diss}	150	mW
Maximum LED junction temperature	$T_{jmax.}$	125	°C
Maximum output die junction temperature	$T_{jmax.}$	125	°C
Thermal resistance, junction emitter to board	θ_{EB}	173	°C/W
Thermal resistance, junction emitter to case	θ_{EC}	149	°C/W
Thermal resistance, junction detector to board	θ_{DB}	111	°C/W
Thermal resistance, junction detector to case	θ_{DC}	127	°C/W
Thermal resistance, junction emitter to junction detector	θ_{ED}	173	°C/W
Thermal resistance, board to ambient [(1)]	θ_{BA}	197	°C/W
Thermal resistance, case to ambient [(1)]	θ_{CA}	4041	°C/W

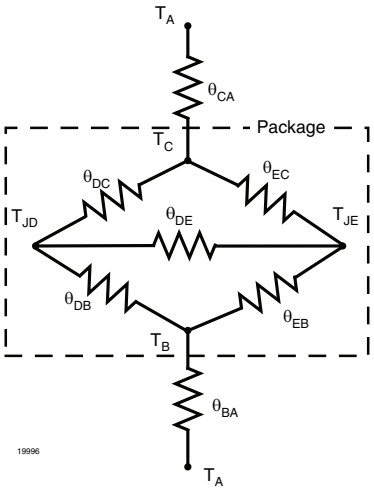

Notes

- The thermal model is represented in the thermal network below. Each resistance value given in this model can be used to calculate the temperatures at each node for a given operating condition. The thermal resistance from board to ambient will be dependent on the type of PCB, layout and thickness of copper traces. For a detailed explanation of the thermal model, please reference Vishay's "Thermal Characteristics of Optocouplers" application note

(1) For 2 layer FR4 board (4" x 3" x 0.062")

For technical questions, contact: optocoupleranswers@vishay.com
THIS DOCUMENT IS SUBJECT TO CHANGE WITHOUT NOTICE. THE PRODUCTS DESCRIBED HEREIN AND THIS DOCUMENT ARE SUBJECT TO SPECIFIC DISCLAIMERS, SET FORTH AT www.vishay.com/doc?91000

ELECTRICAL CHARACTERISTICS (T_{amb} = 25 °C, unless otherwise specified)						
PARAMETER	**TEST CONDITION**	**SYMBOL**	**MIN.**	**TYP.**	**MAX.**	**UNIT**
INPUT						
Forward voltage	I_F = 50 mA	V_F	-	1.25	1.6	V
Junction capacitance	V_R = 0, f = 1 MHz	C_j	-	50	-	pF
OUTPUT						
Collector emitter voltage	I_C = 1 mA	V_{CEO}	70	-	-	V
Emitter collector voltage	I_E = 100 µA	V_{ECO}	7	-	-	V
Collector emitter cut-off current	V_{CE} = 20 V, I_F = 0 A, E = 0	I_{CEO}	-	10	100	nA
COUPLER						
Collector emitter saturation voltage	I_F = 10 mA, I_C = 1 mA	V_{CEsat}	-	-	0.3	V
Cut-off frequency	V_{CE} = 5 V, I_F = 10 mA, R_L = 100 Ω	f_c	-	110	-	kHz
Coupling capacitance	f = 1 MHz	C_k	-	0.3	-	pF

Note

- Minimum and maximum values are testing requirements. Typical values are characteristics of the device and are the result of engineering evaluation. Typical values are for information only and are not part of the testing requirements

CURRENT TRANSFER RATIO							
PARAMETER	**TEST CONDITION**	**PART**	**SYMBOL**	**MIN.**	**TYP.**	**MAX.**	**UNIT**
I_C/I_F	V_{CE} = 5 V, I_F = 1 mA	TCET1101G	CTR	13	30	-	%
		TCET1102, TCET1102G	CTR	22	45	-	%
		TCET1103, TCET1103G	CTR	34	70	-	%
		TCET1104G	CTR	56	90	-	%
	V_{CE} = 5 V, I_F = 5 mA	TCET1100, TCET1100G	CTR	50	-	600	%
		TCET1106, TCET1106G	CTR	100	-	300	%
		TCET1107, TCET1107G	CTR	80	-	160	%
		TCET1108, TCET1108G	CTR	130	-	260	%
		TCET1109, TCET1109G	CTR	200	-	400	%
	V_{CE} = 5 V, I_F = 10 mA	TCET1101, TCET1101G	CTR	40	-	80	%
		TCET1102, TCET1102G	CTR	63	-	125	%
		TCET1103, TCET1103G	CTR	100	-	200	%
		TCET1104, TCET1104G	CTR	160	-	320	%

For technical questions, contact: optocoupleranswers@vishay.com
THIS DOCUMENT IS SUBJECT TO CHANGE WITHOUT NOTICE. THE PRODUCTS DESCRIBED HEREIN AND THIS DOCUMENT ARE SUBJECT TO SPECIFIC DISCLAIMERS, SET FORTH AT www.vishay.com/doc?91000

MAXIMUM SAFETY RATINGS						
PARAMETER	**TEST CONDITION**	**SYMBOL**	**MIN.**	**TYP.**	**MAX.**	**UNIT**
INPUT						
Forward current		I_F	-	-	130	mA
OUTPUT						
Power dissipation		P_{diss}	-	-	265	mW
COUPLER						
Rated impulse voltage		V_{IOTM}	-	-	6	kV
Safety temperature		T_{si}	-	-	150	°C

Note

- According to DIN EN 60747-5-5 (see figure 2). This optocoupler is suitable for safe electrical isolation only within the safety ratings. Compliance with the safety ratings shall be ensured by means of suitable protective circuits

INSULATION RATED PARAMETERS						
PARAMETER	**TEST CONDITION**	**SYMBOL**	**MIN.**	**TYP.**	**MAX.**	**UNIT**
Partial discharge test voltage - routine test	100 %, t_{test} = 1 s	V_{pd}	1.6	-	-	kV
Partial discharge test voltage - lot test (sample test)	t_{Tr} = 60 s, t_{test} = 10 s, (see figure 2)	V_{IOTM}	6	-	-	kV
		V_{pd}	1.3	-	-	kV
Insulation resistance	V_{IO} = 500 V	R_{IO}	10^{12}	-	-	Ω
	V_{IO} = 500 V, T_{amb} = 100 °C	R_{IO}	10^{11}	-	-	Ω
	V_{IO} = 500 V, T_{amb} = 150 °C (construction test only)	R_{IO}	10^{9}	-	-	Ω

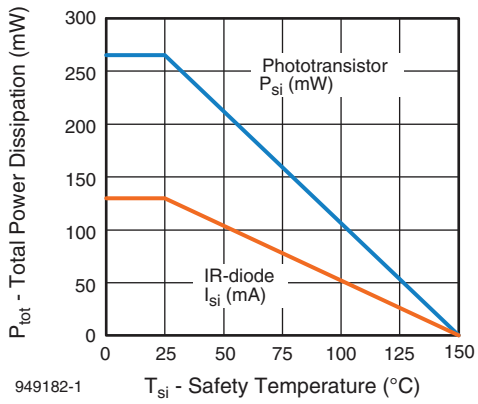

Fig. 1 - Derating Diagram

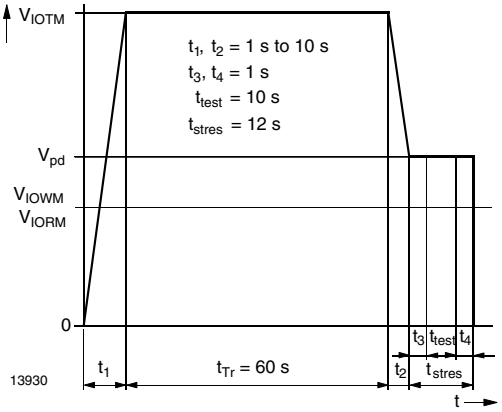

Fig. 2 - Test Pulse Diagram for Sample Test According to DIN EN 60747-5-5 / DIN EN 60747-; IEC 60747

For technical questions, contact: optocoupleranswers@vishay.com
THIS DOCUMENT IS SUBJECT TO CHANGE WITHOUT NOTICE. THE PRODUCTS DESCRIBED HEREIN AND THIS DOCUMENT ARE SUBJECT TO SPECIFIC DISCLAIMERS, SET FORTH AT www.vishay.com/doc?91000

SWITCHING CHARACTERISTICS						
PARAMETER	TEST CONDITION	SYMBOL	MIN.	TYP.	MAX.	UNIT
Delay time	V_S = 5 V, I_C = 2 mA, R_L = 100 Ω, (see Fig. 3)	t_d	-	3	-	µs
Rise time	V_S = 5 V, I_C = 2 mA, R_L = 100 Ω, (see Fig. 3)	t_r	-	3	-	µs
Turn-on time	V_S = 5 V, I_C = 2 mA, R_L = 100 Ω, (see Fig. 3)	t_{on}	-	6	-	µs
Storage time	V_S = 5 V, I_C = 2 mA, R_L = 100 Ω, (see Fig. 3)	t_s	-	0.3	-	µs
Fall time	V_S = 5 V, I_C = 2 mA, R_L = 100 Ω, (see Fig. 3)	t_f	-	4.7	-	µs
Turn-off time	V_S = 5 V, I_C = 2 mA, R_L = 100 Ω, (see Fig. 3)	t_{off}	-	5	-	µs
Turn-on time	V_S = 5 V, I_F = 10 mA, R_L = 1 kΩ, (see Fig. 4)	t_{on}	-	9	-	µs
Turn-off time	V_S = 5 V, I_F = 10 mA, R_L = 1 kΩ, (see Fig. 4)	t_{off}	-	10	-	µs

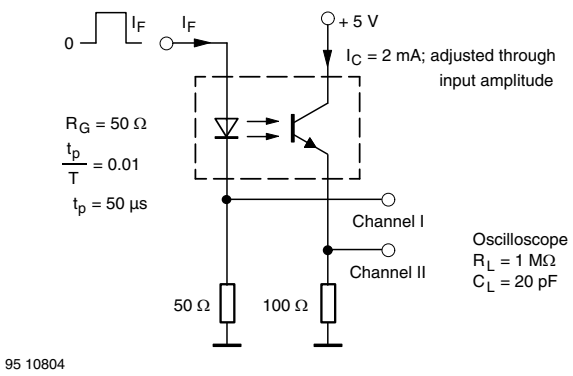

Fig. 3 - Test Circuit, Non-Saturated Operation

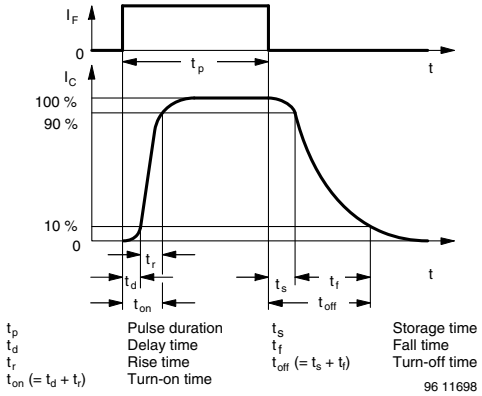

Fig. 5 - Switching Times

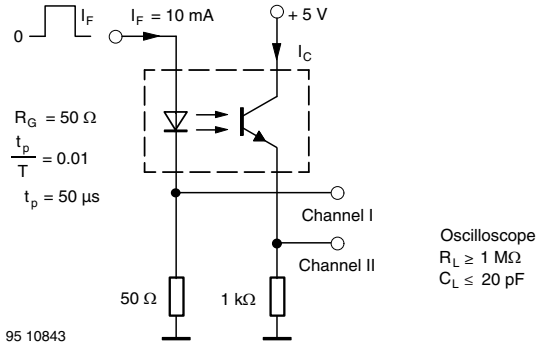

Fig. 4 - Test Circuit, Saturated Operation

For technical questions, contact: optocoupleranswers@vishay.com
THIS DOCUMENT IS SUBJECT TO CHANGE WITHOUT NOTICE. THE PRODUCTS DESCRIBED HEREIN AND THIS DOCUMENT ARE SUBJECT TO SPECIFIC DISCLAIMERS, SET FORTH AT www.vishay.com/doc?91000

TYPICAL CHARACTERISTICS (T_{amb} = 25 °C, unless otherwise specified)

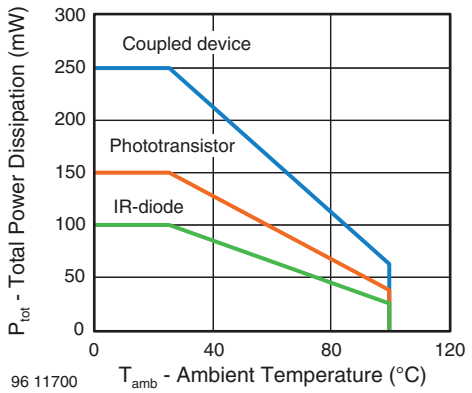

Fig. 6 - Total Power Dissipation vs. Ambient Temperature

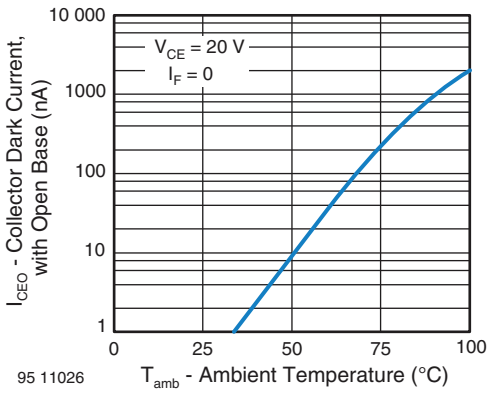

Fig. 9 - Collector Dark Current vs. Ambient Temperature

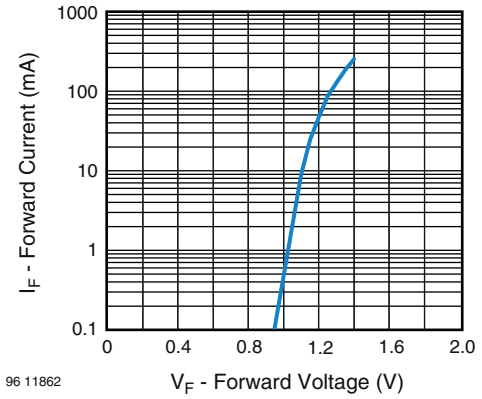

Fig. 7 - Forward Current vs. Forward Voltage

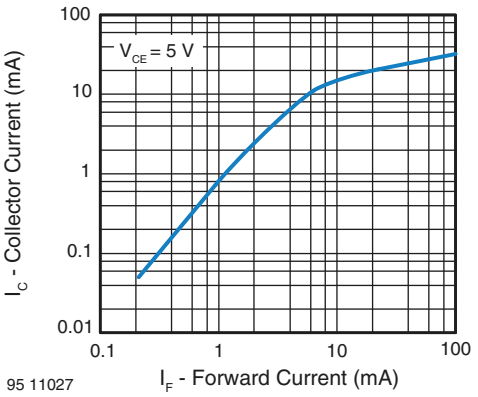

Fig. 10 - Collector Current vs. Forward Current

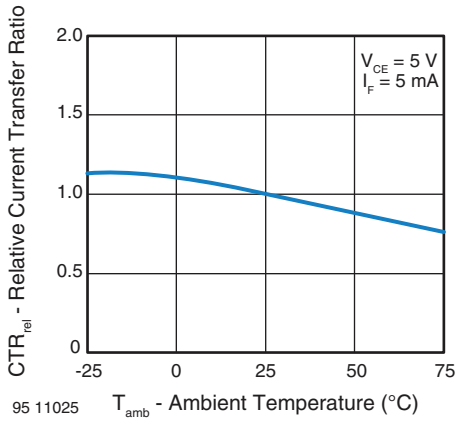

Fig. 8 - Relative Current Transfer Ratio vs. Ambient Temperature

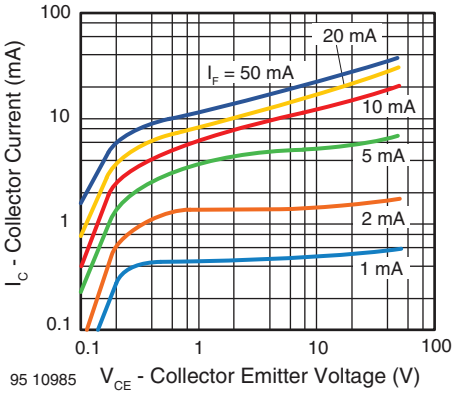

Fig. 11 - Collector Current vs. Collector Emitter Voltage

For technical questions, contact: optocoupleranswers@vishay.com
THIS DOCUMENT IS SUBJECT TO CHANGE WITHOUT NOTICE. THE PRODUCTS DESCRIBED HEREIN AND THIS DOCUMENT ARE SUBJECT TO SPECIFIC DISCLAIMERS, SET FORTH AT www.vishay.com/doc?91000

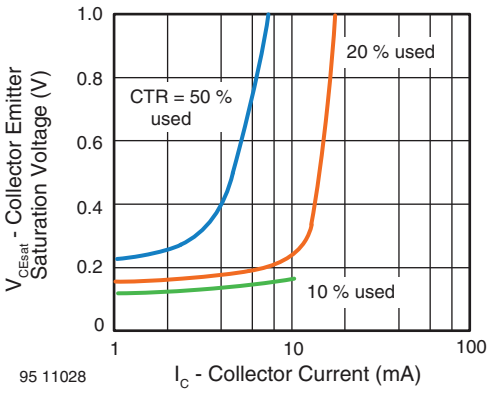

Fig. 12 - Collector Emitter Saturation Voltage vs. Collector Current

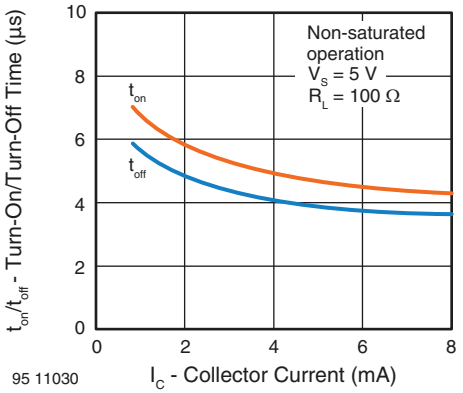

Fig. 14 - Turn-On / Off Time vs. Collector Current

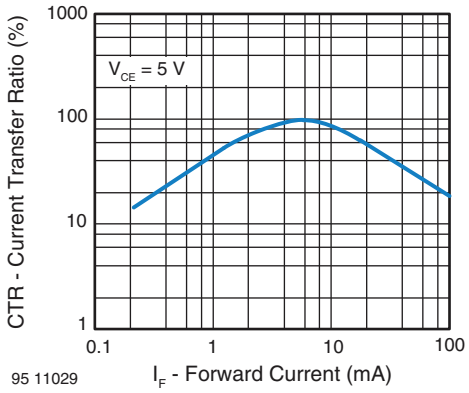

Fig. 13 - Current Transfer Ratio vs. Forward Current

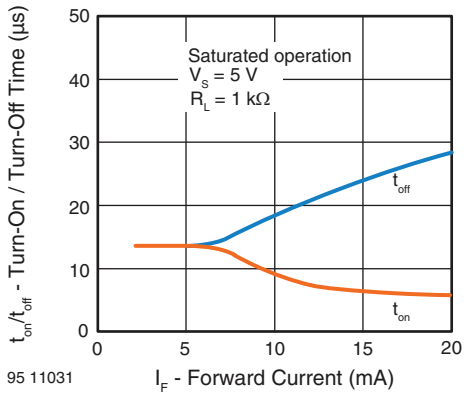

Fig. 15 - Turn-On / Off Time vs. Forward Current

For technical questions, contact: optocoupleranswers@vishay.com
THIS DOCUMENT IS SUBJECT TO CHANGE WITHOUT NOTICE. THE PRODUCTS DESCRIBED HEREIN AND THIS DOCUMENT ARE SUBJECT TO SPECIFIC DISCLAIMERS, SET FORTH AT www.vishay.com/doc?91000

PACKAGE DIMENSIONS in millimeters

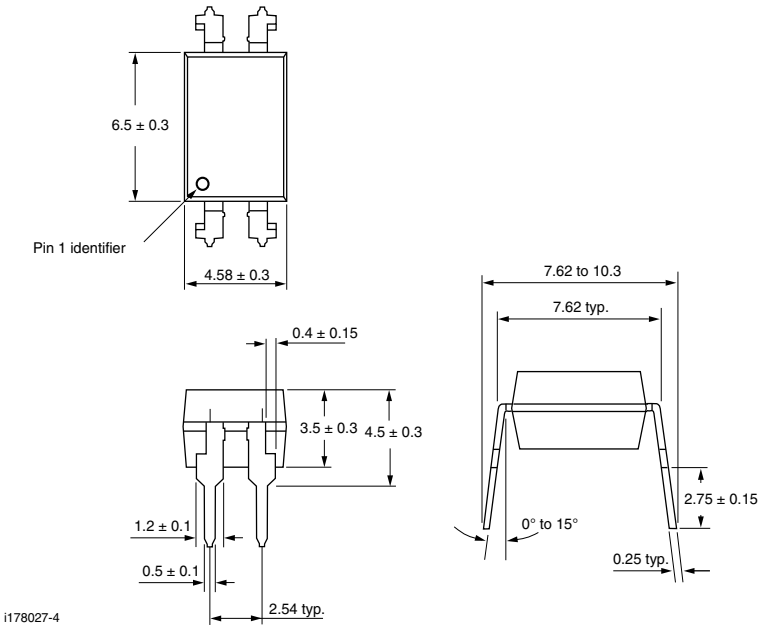

TCET1100G type

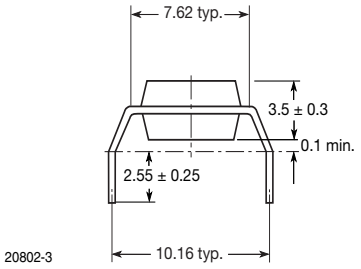

PACKAGE MARKING

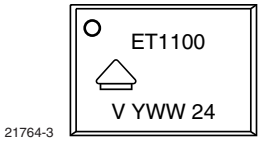

For technical questions, contact: optocoupleranswers@vishay.com
THIS DOCUMENT IS SUBJECT TO CHANGE WITHOUT NOTICE. THE PRODUCTS DESCRIBED HEREIN AND THIS DOCUMENT ARE SUBJECT TO SPECIFIC DISCLAIMERS, SET FORTH AT www.vishay.com/doc?91000

Disclaimer

ALL PRODUCT, PRODUCT SPECIFICATIONS AND DATA ARE SUBJECT TO CHANGE WITHOUT NOTICE TO IMPROVE RELIABILITY, FUNCTION OR DESIGN OR OTHERWISE.

Vishay Intertechnology, Inc., its affiliates, agents, and employees, and all persons acting on its or their behalf (collectively, “Vishay”), disclaim any and all liability for any errors, inaccuracies or incompleteness contained in any datasheet or in any other disclosure relating to any product.

Vishay makes no warranty, representation or guarantee regarding the suitability of the products for any particular purpose or the continuing production of any product. To the maximum extent permitted by applicable law, Vishay disclaims (i) any and all liability arising out of the application or use of any product, (ii) any and all liability, including without limitation special, consequential or incidental damages, and (iii) any and all implied warranties, including warranties of fitness for particular purpose, non-infringement and merchantability.

Statements regarding the suitability of products for certain types of applications are based on Vishay's knowledge of typical requirements that are often placed on Vishay products in generic applications. Such statements are not binding statements about the suitability of products for a particular application. It is the customer's responsibility to validate that a particular product with the properties described in the product specification is suitable for use in a particular application. Parameters provided in datasheets and / or specifications may vary in different applications and performance may vary over time. All operating parameters, including typical parameters, must be validated for each customer application by the customer's technical experts. Product specifications do not expand or otherwise modify Vishay's terms and conditions of purchase, including but not limited to the warranty expressed therein.

Hyperlinks included in this datasheet may direct users to third-party websites. These links are provided as a convenience and for informational purposes only. Inclusion of these hyperlinks does not constitute an endorsement or an approval by Vishay of any of the products, services or opinions of the corporation, organization or individual associated with the third-party website. Vishay disclaims any and all liability and bears no responsibility for the accuracy, legality or content of the third-party website or for that of subsequent links.

Except as expressly indicated in writing, Vishay products are not designed for use in medical, life-saving, or life-sustaining applications or for any other application in which the failure of the Vishay product could result in personal injury or death. Customers using or selling Vishay products not expressly indicated for use in such applications do so at their own risk. Please contact authorized Vishay personnel to obtain written terms and conditions regarding products designed for such applications.

No license, express or implied, by estoppel or otherwise, to any intellectual property rights is granted by this document or by any conduct of Vishay. Product names and markings noted herein may be trademarks of their respective owners.

© 2024 VISHAY INTERTECHNOLOGY, INC. ALL RIGHTS RESERVED