Data sheet



# SFM60-HRKT0K02

## SFS/SFM60

MOTOR FEEDBACK SYSTEMS

SICK
Sensor Intelligence.



Illustration may differ

## Ordering information

| Type | part no. |
|---|---|
| SFM60-HRKT0K02 | 1050527 |

Other models and accessories ➜ www.sick.com/SFS_SFM60

## Detailed technical data

### Features

| | |
|---|---|
| **Items supplied** | M3 mounting screws for stator coupling not included with delivery. |

### Safety-related parameters

| | |
|---|---|
| **$MTTF_D$ (mean time to dangerous failure)** | 230 years (EN ISO 13849) [1] |

[1] This product is a standard product and does not constitute a safety component as defined in the Machinery Directive. Calculation based on nominal load of components, average ambient temperature 60 °C, frequency of use 8760 h/a. All electronic failures are considered hazardous. For more information, see document no. 8015532.

### Performance

| | |
|---|---|
| **Sine/cosine periods per revolution** | 1,024 |
| **Number of the absolute ascertainable revolutions** | 4,096 |
| **Total number of steps** | 134,217,728 |
| **Measuring step** | 0.3 ″ For interpolation of the sine/cosine signals with, e. g., 12 bits |
| **Integral non-linearity** | Typ. ± 45 ″, Error limits for evaluating sine/cosine period, without mechanical tension of the stator coupling |
| **Differential non-linearity** | ± 7 ″, Non-linearity within a sine/cosine period |
| **Operating speed** | ≤ 6,000 $min^{-1}$, up to which the absolute position can be reliably produced |
| **Available memory area** | 1,792 Byte |
| **System accuracy** | ± 52 ″ |

### Interfaces

| | |
|---|---|
| **Type of code for the absolute value** | Binary |
| **Code sequence** | Rising, For clockwise shaft rotation, looking in direction “A” (see dimensional drawing) |
| **Communication interface** | HIPERFACE® |

### Electronics

| | |
|---|---|
| **Connection type** | Cable, 8-wire (4 x 2 x 0.15 $mm^2$), radial, 1.5 m |
| **Supply voltage** | 7 V DC ... 12 V DC |

| | |
|---|---|
| **Recommended supply voltage** | 8 V DC |
| **Current consumption** | < 80 mA (without load) |
| **Output frequency for sine/cosine signals** | ≤ 200 kHz |

## Mechanics

| | |
|---|---|
| **Shaft version** | Through hollow shaft |
| **Shaft diameter** | 14 mm |
| **Shaft material** | Stainless steel |
| **Flange material** | Zinc diecast |
| **Housing material** | Aluminum die cast |
| **Flange type / stator coupling** | Stator coupling (BEF-DS07XFX) |
| **Dimensions** | See dimensional drawing |
| **Weight** | ≤ 0.25 kg |
| **Moment of inertia of the rotor** | 40 gcm² |
| **Operating speed** | ≤ 9,000 $min^{-1}$ [1] |
| **Angular acceleration** | ≤ 500,000 rad/s² |
| **Operating torque** | 0.6 Ncm (+20 °C) |
| **Start up torque** | + 0.8 Ncm (+20 °C) |
| **Permissible movement static** | ± 0.3 mm, ± 0.5 mm radial, axial |
| **Permissible movement dynamic** | ± 0.1 mm radial<br>± 0.2 mm axial |
| **Life of ball bearings** | 3.6 x $10^9$ revolutions |

[1] Allow for self-heating of 3.3 K per 1,000 rpm when designing the operating temperature range.

## Ambient data

| | |
|---|---|
| **Operating temperature range** | –40 °C ... +115 °C |
| **Storage temperature range** | –40 °C ... +115 °C, without package |
| **Relative humidity/condensation** | 90 %, Condensation not permitted |
| **Resistance to shocks** | 100 g, 6 ms (according to EN 60068-2-27) |
| **Frequency range of resistance to vibrations** | 20 g, 10 Hz ... 2,000 Hz (EN 60068-2-6) |
| **EMC** | According to EN 61000-6-2 and EN 61000-6-3 [1] |
| **Enclosure rating** | IP65, with mating connector inserted (IEC 60529) |

[1] The EMC according to the standards quoted is achieved when the motor feedback system is mounted in an electrically conductive housing, which is connected to the central earthing point of the motor controller via a cable screen. The GND-(0 V) connection of the supply voltage is also grounded here. If other shielding concepts are used, users must perform their own tests.

## Certificates

| | |
|---|---|
| **EU declaration of conformity** | ✓ |
| **UK declaration of conformity** | ✓ |
| **ACMA declaration of conformity** | ✓ |
| **Moroccan declaration of conformity** | ✓ |
| **China-RoHS** | ✓ |
| **Information according to Art. 3 of Data Act (Regulation EU 2023/2854)** | ✓ |

## Classifications

| | |
|---|---|
| **ECLASS 5.0** | 27270590 |
| **ECLASS 5.1.4** | 27270590 |
| **ECLASS 6.0** | 27270590 |
| **ECLASS 6.2** | 27270590 |
| **ECLASS 7.0** | 27270590 |
| **ECLASS 8.0** | 27270590 |
| **ECLASS 8.1** | 27270590 |
| **ECLASS 9.0** | 27270590 |
| **ECLASS 10.0** | 27273805 |
| **ECLASS 11.0** | 27273901 |
| **ECLASS 12.0** | 27273901 |
| **ETIM 5.0** | EC001486 |
| **ETIM 6.0** | EC001486 |
| **ETIM 7.0** | EC001486 |
| **ETIM 8.0** | EC001486 |
| **UNSPSC 16.0901** | 41112113 |

## Dimensional drawing Through hollow shaft, cable - standard system

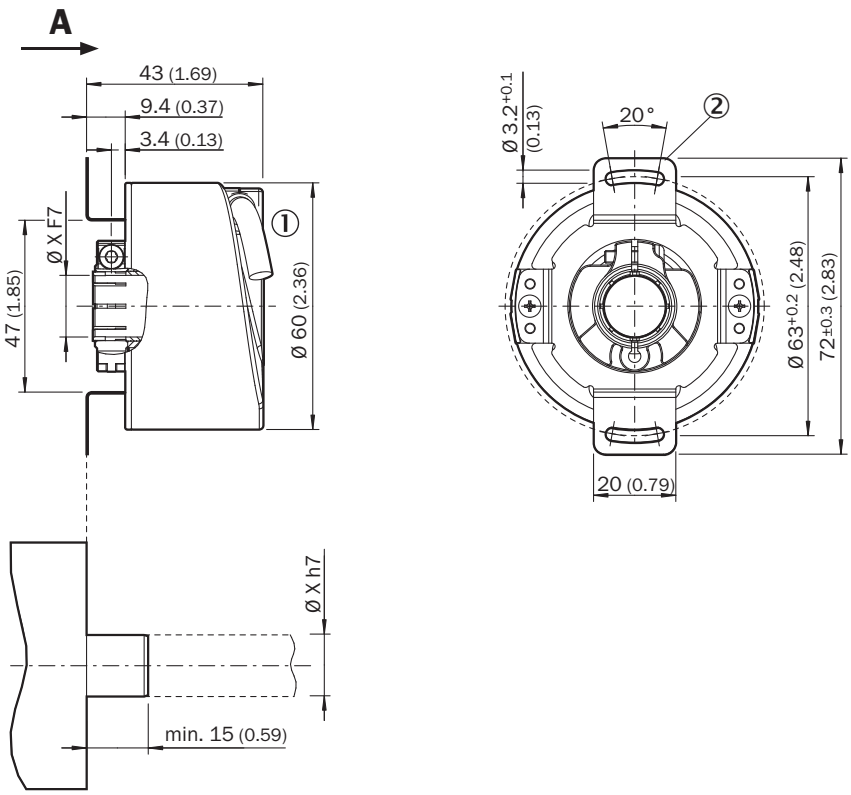


Dimensions in mm (inch)
General tolerances according to DIN ISO 2768-mk
① cable diameter = 5.6 mm +/- 0.2 mm bend radius = 30 mm

② Dimensional drawing of the stator coupling may differ depending on the variant. Please also refer to the dimensional drawing of the stator coupling.

## PIN assignment

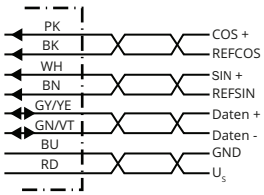


| Wire colors (cable connection) | Signal | Explanation |
|---|---|---|
| Brown | REFSIN | Process data channel |
| White | + SIN | Process data channel |
| Black | REFCOS | Process data channel |
| Pink | + COS | Process data channel |
| Gray or yellow | Data + | Parameter channel RS 485 |
| Green or purple | Data - | Parameter channel RS 485 |
| Blue | GND | Ground connection |
| Red | $U_S$ | Supply voltage |
| Screen | – | Screen connected to encoder housing |

## Diagrams Signal specification of the process channel

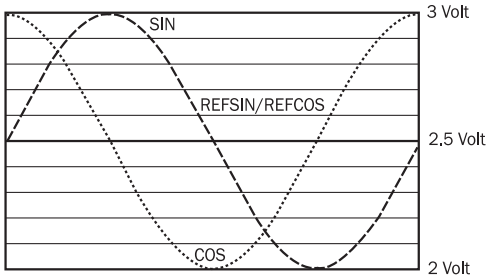


Signal diagram for clockwise rotation of the shaft looking in direction "A" (see dimensional drawing)
1 period = 360 ° : 1024

## Operation note Charactersitics applicable to all permissible environmental conditions

| Signal | Values/unit |
|---|---|
| Signal peak, peak $V_{SS}$ of SIN, COS | 0.9 V ... 1.1 V |
| Signal offset REFSIN, REFCOS | 2.2 V ... 2.8 V |

## Operation note Model-specific settings

| | SFS | SFM |
|---|---|---|
| Model ID (command 52h) | 22h | 27h |
| Free $E^2$PROM [bytes] | 128/1.792 | 128/1.792 |
| Address | 40h | 40h |
| Mode_485 | E4h | E4h |
| Codes 0 to 3 | 55h | 55h |
| Counter | 0 | 0 |

## Operation note Overview of supported commands for HIPERFACE<sup>®</sup>

| | | | SFS | SFM |
|---|---|---|---|---|
| **Command byte** | **Function** | **Code 0** [1] | **Comment** | **Comment** |
| 42h | Read position | ■ | | |
| 43h | Set position | | | |
| 44h | Read analog value | | Channel number 48h | Channel number 48h |
| | | | Temperature [°C] | Temperature [°C] |
| 46h | Read counter | | | |
| 47h | Increase counter | | | |
| 49h | Delete counter | ■ | | |
| 4Ah | Read data | | | |
| 4Bh | Store data | | | |
| 4Ch | Determine status of a data field | | | |
| 4Dh | Create data field | | | |
| 4Eh | Determine available memory area | | | |
| 4Fh | Change access code | | | |
| 50h | Read encoder status | | | |
| 52h | Read out type label | | Encoder type = 22h | Encoder type = 22h |
| 53h | Encoder reset | | | |
| 55h | Allocate encoder address | ■ | | |
| 56h | Read serial number and program version | | | |
| 57h | Configure serial interface | ■ | | |

[1] The commands thus marked include the parameter 'Code 0'. Code 0 is a byte inserted into the protocol to provide additional protection of vital system parameters against accidental overwriting. When the device is supplied, 'Code 0' = 55h.

## Operation note Overview of status messages for HIPERFACE<sup>®</sup>

| | Status code | Description | SFS | SFM |
|---|---|---|---|---|
| Error type | 00h | The encoder has not detected any faults | ■ | ■ |
| Initialization | 01h | Incorrect alignment data | ■ | ■ |
| | 02h | Incorrect internal angular offset | ■ | ■ |
| | 03h | Data field partitioning table destroyed | ■ | ■ |
| | 04h | Analog limit values not available | ■ | ■ |
| | 05h | Internal I2C bus inoperative | ■ | ■ |
| | 06h | Internal checksum error | ■ | ■ |
| Protocol | 07h | Encoder reset occurred as a result of program monitoring | ■ | ■ |
| | 09h | Parity error | ■ | ■ |
| | 0Ah | Checksum of transmitted data is incorrect | ■ | ■ |
| | 0Bh | Unknown command code | ■ | ■ |
| | 0Ch | Number of transmitted data is incorrect | ■ | ■ |
| | 0Dh | Transmitted command argument is not allowed | ■ | ■ |
| Data | 0Eh | The selected data field may not be written to | ■ | ■ |
| | 0Fh | Incorrect access code | ■ | ■ |
| | 10h | Size of specified data field cannot be changed | ■ | ■ |
| | 11h | Specified word address lies outside the data field | ■ | ■ |
| | 12h | Access to non-existent data field | ■ | ■ |
| Position | 01h | Analog signals outside specification | ■ | ■ |
| | 1Fh | Speed too high, no position formation possible | ■ | ■ |
| | 20h | Singleturn position unreliable | ■ | ■ |
| | 21h | Multiturn position error | | ■ |
| | 22h | Multiturn position error | | ■ |
| | 23h | Multiturn position error | | ■ |
| Other | 1Ch | Value monitoring of the analog signals (process data) | ■ | ■ |
| | 1Dh | Transmitter current critical (contamination, transmitter breakage) | ■ | ■ |
| | 1Eh | Encoder temperature critical | ■ | ■ |
| | 08h | Counter overflow | ■ | ■ |
| For more information on the interface see HIPERFACE® - description, part no. 8010701 | | | | |

## Recommended accessories

Other models and accessories ➜ www.sick.com/SFS_SFM60

| | Brief description | Type | part no. |
|---|---|---|---|
| programming devices | | | |
|  | • **Product segment:** Programming devices<br>• **Product family:** PGT-11-S<br>• **Description:** SVip® LAN programming tool for all motor feedback systems<br>• **Items supplied:** 1x programming tool PGT-11-S LAN, 1x power supply unit 100-240 V AC / 12 V DC, primary adapter (Europe, UK, USA/Japan, Australia), Ethernet cable 3 m | PGT-11-S LAN | 1057324 |

| | Brief description | Type | part no. |
|---|---|---|---|
| Mounting systems | | | |
|  | • **Product family:** Stator couplings<br>• **Description:** One-sided stator coupling, slot, slot radius 33 mm to 48.5 mm, slot width 5.1 mm | BEF-DS01DFS/VFS | 2047428 |
|  | • **Product family:** Stator couplings<br>• **Description:** Stator coupling with hole circle diameter Ø72 mm | BEF-DS07XFX | 2059368 |
|  | • **Product family:** Stator couplings<br>• **Description:** One-sided stator coupling, slot, slot radius 32.25 mm to 141.75 mm, slot width 5.1 mm | BEF-DS02DFS/VFS | 2047430 |
|  | • **Product family:** Stator couplings<br>• **Description:** One-sided stator coupling, slot, slot radius 33 mm to 211.9 mm, slot width 5.1 mm | BEF-DS03DFS/VFS | 2047431 |
|  | • **Product family:** Stator couplings<br>• **Description:** Stator coupling, 16.5 mm high | BEF-DS05XFX | 2057423 |

# SICK AT A GLANCE

SICK is one of the leading manufacturers of intelligent sensors and sensor solutions for industrial applications. A unique range of products and services creates the perfect basis for controlling processes securely and efficiently, protecting individuals from accidents and preventing damage to the environment.

We have extensive experience in a wide range of industries and understand their processes and requirements. With intelligent sensors, we can deliver exactly what our customers need. In application centers in Europe, Asia and North America, system solutions are tested and optimized in accordance with customer specifications. All this makes us a reliable supplier and development partner.

Comprehensive services complete our offering: SICK LifeTime Services provide support throughout the machine life cycle and ensure safety and productivity.

**For us, that is “Sensor Intelligence.”**

# WORLDWIDE PRESENCE:

Contacts and other locations –www.sick.com