SW

Revision level			Revision Record	Changed	Date	Approved	Date
Drawing	State	Part					
06.1	Design Release	-	SEE ECN# 015273	CTF	07/09/2019	GAL	07/09/2019

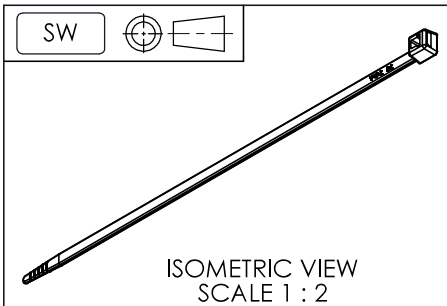

ISOMETRIC VIEW
SCALE 1 : 2

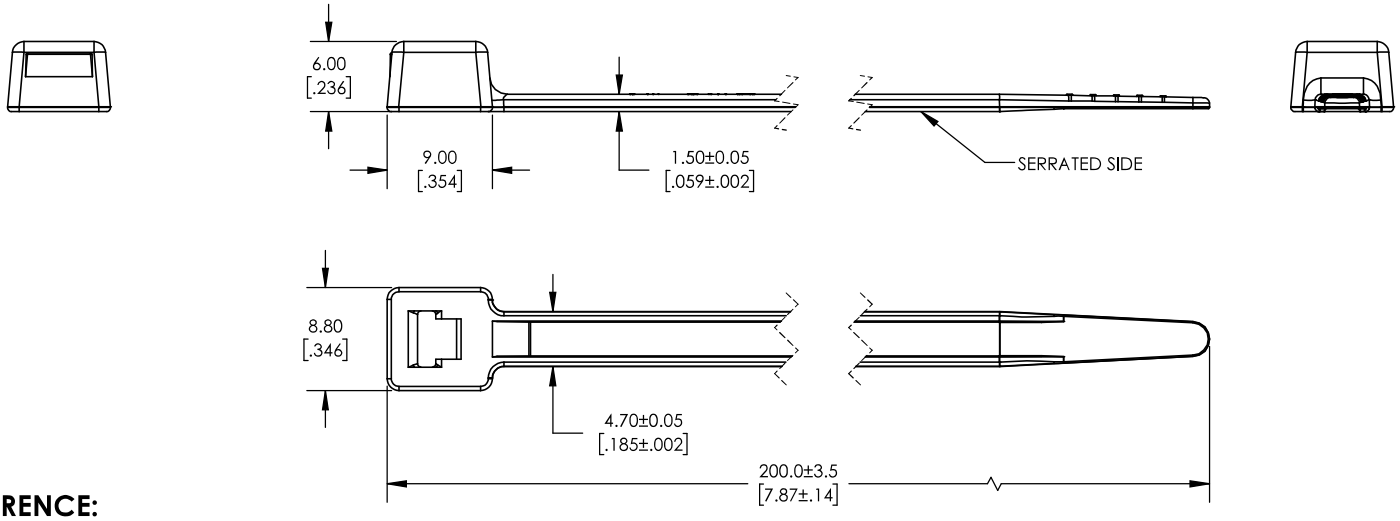

REFERENCE:

PERFORMANCE REQUIREMENTS

1. CABLE TIE MINIMUM LOOP TENSILE STRENGTH: 225N (50lbf)
2. TOOL APPLICATION MAXIMUM TENSION FORCE: 55N (12lbf)
3. BUNDLE DIAMETER RANGE: 8mm TO 50mm
4. TEMPERATURE RANGE: -40°C to +140°C [-40°F to +284°F]
5. MAXIMUM PERCENT REGRIND PERMISSIBLE: 50%

06.1

06.1

GLOBAL PART DESCRIPTION	MATERIAL	
	TYPE	COLOR
T50R-PVDF-GY	PVDF	GRAY

Material: SEE CHART

Units: millimeters

Dimension without tolerances details to:
.XXX = ±.013
.XX = ±.13
.X = ±.3
None = ±.8
∠ = ±0.5°
Dimension Formatted mm/[in]

The copyright of this drawing is reserved by HellermannTyton. It is issued on condition that it is not reproduced, copied, or disclosed to a third party, either wholly or in part, without the consent of HellermannTyton.

Drawn	CTF	1/11/2019
Approved	GAL	1/11/2019

HellermannTyton
North America
Email: corp@htamericas.com
Web: www.hellermann.tyton.com

Article/Type-No: T50R

Title: **STANDARD T50R CABLE TIE**

Drawing-No: **17-2468-001-CSU**

Production : Phase

Scale: 2:1

Project Number: PRP 17-2468

Format: AH

Sheet: 1/1